2nd International Conference on Multidisciplinary Research (ICMR-2018)
Mahratta Chamber of Commerce, Industries and Agriculture, Pune (India)
08th - 09th September 2018 www.conferenceworld.in ISBN :978-93-87793-45-3

COMPARATIVE ANALYSIS OF SINGLE CELL BOX GIRDER FOR DIFFERENT CODE

Jayesh Patil[1], Prof. R.S. Patil[2], Dr.G.R.Gandhe[3]

[1] P.G Student, Civil Engineering Department,
Deogiri Institute of Engineering and Management Studies, Aurangabad, Maharastra.
[2]Assistant Professor , Civil Engineering Department,
Deogiri Institute of Engineering and Management Studies, Aurangabad
[3]Head of Dept. Civil Engineering Department,
Deogiri Institute of Engineering and Management Studies, Aurangabad

ABSTRACT

This paper summarize a comparative analysis and design of single cell box girder bridge for two different codes. The aim and objective of the work is to analyze the single cell box girder under Indian Road congress i.e IRC loading and AASHTO loading for ensure the safety, quality and overall cost of structure. This analysis is carried out by using SAP2000 software. As a result of this study it is clear that the results of shear force and bending moment are same for dead load and they varies for moving load, because IRC code gives heavy loading as compare to AASHTO code. Area of steel in pre stressing for AASHTO code is less as compare to IRC. Hence the AASHTO code is more suitable than IRC code.

Keywords: AASHTO code, IRC code, SAP 2000 software, Pre stress Force, Single cell box girder.

I. INTRODUCTION

Government of each country has formulated its own code of practice for maintaining its standards. This code has formulated based on years of observations, developments and research. Highways network in India are controlled by Government of India. Hence the bridges and flyovers build on highway should confirm their specifications and standards by Government of India. All the bridges and flyovers built on national and state highway should follow the specifications and standards of Indian Road Congress (IRC). Indian Road Congress code (IRC Code) prescribed by Ministry of Surface Transport, Government of India.

In the United States use the code of AASHTO "American Association of State Highway and Transportation Officials"; this code is use for design of highway bridge. AASHTO code is accepted by so many countries as the general code for bridge design. During designing two different codes gives different design, So that choose the most appropriate one, it's important to do comparative analysis of different codes. For this comparative study following two codes is use

1) IRC and IS codes Design Specification
2) AASHTO Bridge Design Specification

These two codes will be used for analysis of Single Cell Box Girder.

II MATERIAL PROPERTIES AND ALLOWABLE STRESS

2.1 Concrete properties: Grade: M 50

2.2 Tendon Properties:

P .C Strand: Φ15.2 mm (0.6″strand)

Yield Strength: fpy = 1600 N/mm^2

Ultimate Strength: fpu = 1900 N/mm^2

Cross Sectional area of each tendon = 140 mm2

Modulus of Elasticity: Eps = 2.0 X 105N/mm2

Jacking Stress: fpj = 0.7fpu = 1330 N/mm2

Curvature friction factor: μ = 0.3 /rad

Anchorage Slip: Δs = 6 mm (At the Beginning and at the End)

2.3 Cross section specification

Span = 50 m

Total width = 7.5 m

Wearing coat = 100 mm

Total Depth = 2.2 m

Top Slab Thickness = 0.300 m

Bottom Slab Thickness = 0.200 m

Exterior Girder Thickness = 0.300 m

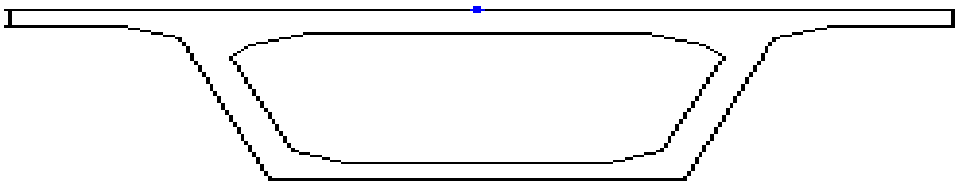

Fig.1 Cross Section Of Box Girder

III LOADING ON BOX GIRDER BRIDGE

The various type of loads, forces and stresses to be considered in the analysis and design of the various components of the bridge are given in the IRC 6:2000(Section II) and AASHTO-LRFD (Section 3) But the common forces are considered to design the model are as follows:

3.1 Dead Load (DL)

The dead load carried by the girder or the member consists of its own weight of the superstructure and any fixed loads supported by the member. The dead load can be estimated fairly accurately during design and can be controlled during construction and service.

3.2 Superimposed Dead Load

The weight of superimposed dead load includes footpaths, earth-fills,wearing course, stay-in-place forms, ballast, water-proofing, signs, architectural ornamentation, pipes, conduits, cables and any other immovable appurtenances installed on the structure.

Wearing coat = 0.1x7.50x18= 13.50 kN/m

3.3 Live Load (LL)

Live loads are those caused by vehicles which pass over the bridge and are transient innature. These loads cannot be estimated precisely, and the designer has very little control over them once the bridge is opened to traffic. In this case Following types of loadings are adopted for the analysis of two lane box girder,

A. Indian roads Congress Bridge loading

Highway bridge decks have to be designed to withstand the live loads specified by the Indian Roads Congress. The different categories of loadings were first formulated in 1958 and they have not changed in the subsequent revisions of 1964, 1966 and 2000.

Following class loadings are consider of analysis

A. IRC Class AA Loading

Two different types of vehicles are specified under this category grouped as tracked and wheeled vehicles. The IRC Class AA tracked vehicle (simulating an army tank) of 700 KN and a wheeled vehicle (heavy duty army truck) of 400 KN.

All the bridges located on National Highways and State Highways have to be designed for this heavy loading. These loadings are also adopted for bridges located within certain specified municipal localities and along specified highways. Alternatively, another type of loading designated as class 70 R is specified instead of class AA loading.

B. IRC Class A Loading

IRC Class A Loading consists of a wheel load train comprising a truck with trailers of specified axel spacing. The heavy duty truck with two trailers transmits loads from 8 axles varying from a minimum of 27 KN to a maximum of 114 KN. The Class A loading is a 554KN train of wheeled vehicles on 8 axels. Impact has to be allowed as per the formulae recommended in IRC: 6 -2014. The impact factor is inversely proportional to the length of the span and is different for steel and concrete bridges. This type of loading is recommended for all roads on which permanent bridges and culverts are constructed.

Table No.1 Live Load Combinations .IRC:6-2000 Clause 207.4

Sr. no.	Carriage Way Width	Number of lanes for design	Load Combination
1	Less than 5.3m	1	One lane of class A considered to occupy 2.3 m. the remaining width of carriage way shall be loaded with 5 KN/m^2
2	5.3 m and above but less than 9.6 m	2	One lane of Class 70 R or two lanes of Class A
3	9.6 m and above but less than 13.1 m	3	One lane of class 70R for every two lanes with one lane of class A on the remaining lane or 3 lanes of Class A
4	13.1 m and above but less than 16.6 mm	4	One lane of Class 70R for every two lanes with one lane of Class A for the remaining lanes, if any, or one lane of Class A for each lane.
5	16.6 m and above but less than 20.1 m	5	-do-
6	20.1 m and above but less than 23.6 m	6	-do-

C. AASHTO (American Association of State Highway Transport Official) Loading

The American Association of Highway and transportation Association (AASHTO), has prescribed the heaviest loading is followed in USA, Australia, Bangladesh, Canada, Ethopia, Philippines and Turkey. This loading

comprises of a heavy tractor truck with a semitrailer of total load of 320.3 KN or the corresponding lane loading. The lane loading consist of a uniformly distributed load of intensity 9.3 KN/m together with a knife edge load of 80 KN for bending moment and 115.7 KN for shear force computations. In addition, impact is to be added for both the cases as recommended by AASHTO recommendations. While designing bridges, both the truck and lane loading should be considered and the one which gives the worst effect is to be adopted.

When truck loading is used, only one truck is considered for each traffic loads for the whole of its length. Also there is no reduction in load intensity for up to two lanes of traffic loaded.

- As per IRC
  Vehicle Load: - Class AA and Class A
  Dynamic Allowance: - 33%
- As per AASTHO
  Vehicle Load: - HL-93TDM, HL-93TRK
  Dynamic Allowance: - 33%

IV. MODELING OF BRIDGE

For the analysis of bridge of refer SAP 2000 bridge modeling software

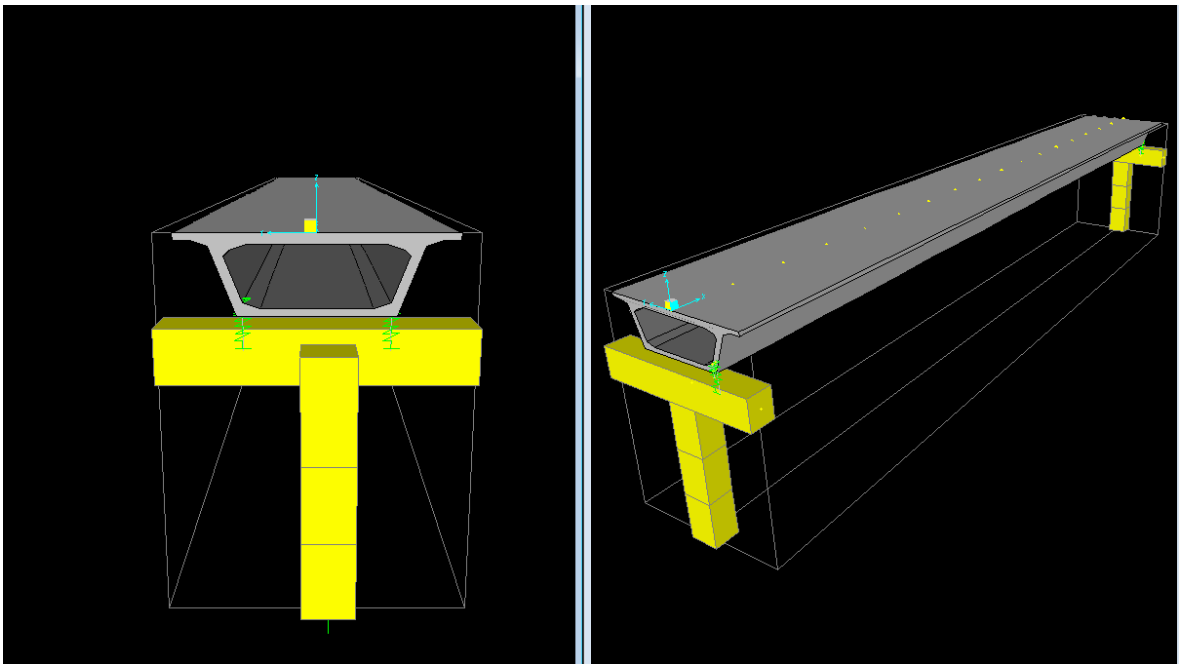

Fig. 2 Single Cell Box Girder Bridge Model

V. RESULT AND DISCUSSION

The study of behavior of Bridge for moving load with the help of SAP2000 bridge modeling software. The critical study considered two code IRC and AASHTO code. The comparative analysis between two codes considered parameter is shear force, Bending moment and torsion.

For the moving load reaction are different for IRC 6-2000 code for Class AA is 350 KN for each wheel of two track vehicle and For Class A bridge for two trailer of 8 wheel are 27 to 114 KN.

For AASHTO code HL-93 TDM and TRK types loading are considered with the uniform distributed load intensity is 9.34 KN/m.

The result are shown in tabular form for moving load

Table No.2 Shear Force, Bending Moment And Torsion

Parameter	Shear force		MOMENT			TORSION		
Distance	IRC	AASHTO	Distance	IRC	AASHTO	Distance	IRC	AASHTO
M	KN	KN	M	KN-m	KN-m	M	KN-m	KN-m
0	-4445.16	-3937.99	**0**	-12395.4	-12395.4	**0**	3298.12	1330.97
2.5	-3922.64	-3410.15	**2.5**	-5101.26	-5466.47	**2.5**	3129.94	12687.44
5	-3569.36	-3017.17	**5**	2395.48	1161.58	**5**	3021.26	1211.95
7.5	-3218.21	-2736.10	**7.5**	9408.71	7286.50	**7.5**	2944.83	1164.30
10	-2870.12	-2407.38	**10**	15611.71	12771.58	**10**	2904.17	1127.32
12.5	-2524.27	-2082.66	**12.5**	20930.26	17539.10	**12.5**	2888.59	1100.14
15	-2178.37	-1760.17	**15**	25311.34	21523.30	**15**	2881.57	1077.73
17.5	-1832.41	-1440.09	**17.5**	28699.19	24590.51	**17.5**	2881.56	1060.52
20	-1485.41	-1121.51	**20**	30986.85	26704.79	**20**	2881.54	1048.60
22.5	-1140.30	-807.09	**22.5**	32364.33	27963.77	**22.5**	2881.50	1040.42
25	796.20	469.69	**25**	32818.75	28379.69	**25**	2881.46	1039.06
27.5	1141.75	808.04	**27.5**	32360.91	27962.35	**27.5**	2881.50	1041.01
30	1488.26	1124.24	**30**	30978.91	26701.49	**30**	2881.53	1048.60
32.5	1834.31	1441.89	**32.5**	28657.48	24582.54	**32.5**	2881.54	1060.52
35	2180.67	1762.89	**35**	25300.78	21519.10	**35**	2881.56	1077.72
37.5	2527.01	2085.36	**37.5**	20916.80	17529.07	**37.5**	2888.48	1100.34
40	2873.53	2410.69	**40**	15590.96	12755.22	**40**	2904.10	1127.32
42.5	3221.92	2740.25	**42.5**	9379.27	7260.39	**42.5**	2944.10	1164.30
45	3572.83	3074.58	**45**	2356.20	1124.71	**45**	3021.60	1212.10
47.5	3945.26	3412.72	**47.5**	-5135.38	-5469.76	**47.5**	3130.38	1268.47
50	4445.16	3937.91	**50**	-12395.4	-12395.4	**50**	3298.80	1330.97

After analysis of single cell box girder under IRC loading and AASHTO loading, results of shear force, Bending moment and torsion are graphically compared as bellow

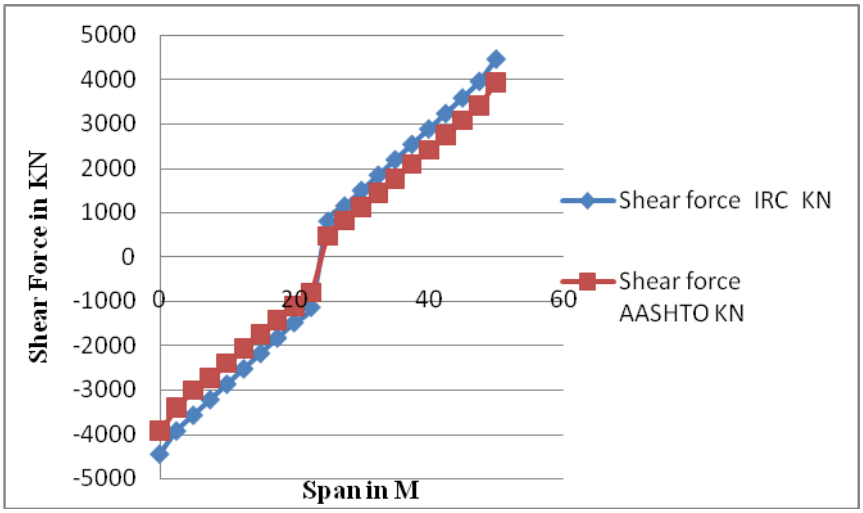

Fig. 3.Shear force Comparison

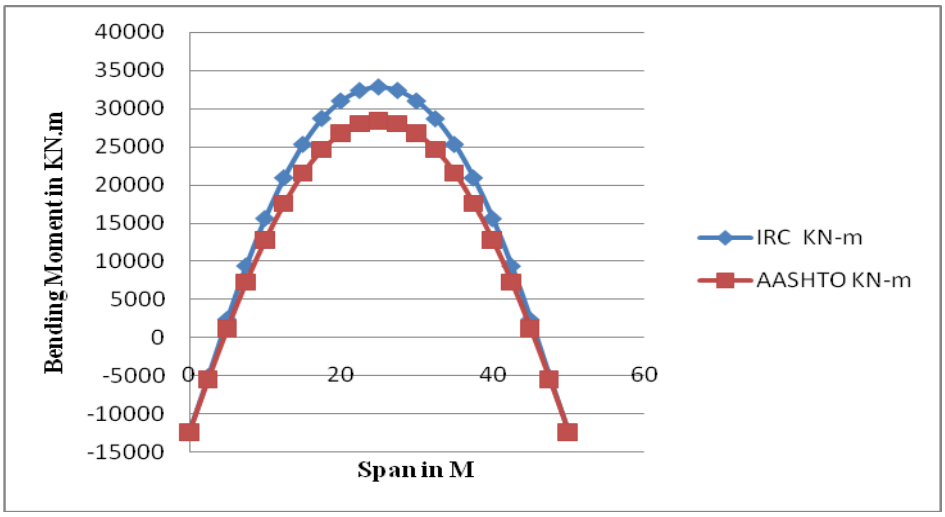

Fig. 4.Bending Moment Comparison

VI. CONCLUSION

This paper presents comparative analysis of single cell box girder it's help to designer with considering different factors based on code at the starting of project. Results of analysis based on finite element modeling, node by node result are specified in above tables.

According to results shear force and bending moment for dead load are same but it's different for moving load because IRC code gives heavy loading as compared with AASHTO code. After comparing both results, the AASHTO code having less shear force, bending moment and Torsion.

1. The Shear force in KN in IRC code as compare with AASHTO code are averagely increase by 16.24%.

2. The Bending moment in KN-m in IRC code as compare with AASHTO code are averagely increase by 14.04%.
3. The Torsion in KN-m in IRC code as compare with AASHTO code are averagely increase by 61.64%.

Based on this comparative study it is clear that AASHTO code gives better results than IRC and also it is more economical than IRC.

REFERANCES

[1] IRC: 6-2014 "Standard specification and code of practice for road bridge" Indian Road Congress.

[2] IRC: 18-2000 " Design criteria for prestressed concrete road bridges (Post-Tensioned Concrete)" Indian Road Congress.

[3] AASHTO- LRFD Bridge Design Specifications.

[4] Harish M.K, Chethan V.R, Ashwini B. T - Analysis of box girder bridge under IRC loading, Internation Journal of Scientific Development and research, vol -2 (2017) 137-141.

[5] Epuri Pavan Kumar, A. Naresh, Shri Ramoju Praveen Kumar – Comparative study of precast girder bridge by using the IRC and AASHTO codes, International Journal of Research in Engineering and Advanced Technology, Vol -3 (2015) 249-257.

[6] Patil Yashwant,Prof Shinde sangita – Comparative analysis and design of box girder bridge with two different codes, International Journal of Civil engineering and technology, Vol – 4 (2013) 111-121.

[7] H.R.Nikhade, A.L.Dandge ,A.R.Nikhade – Analysis and design of bridge, International Journal of Science Engineering and Technology, Vol- 3 (2014) 2976-2980.

[8] Priyanka Bhavgade – Analysis and design of prestressed concrete box girder bridge.

[9] Phani kumar, S.V.V.K Babu – Analysis and design of prestressed box girder bridge by IRC 112, International Journal of constructive research in Civil Engineering, Vol-2 (2011).