2nd International Conference on Multidisciplinary Research (ICMR-2018)
Mahratta Chamber of Commerce, Industries and Agriculture, Pune (India)
08th - 09th September 2018 www.conferenceworld.in ISBN :978-93-87793-45-3

Impact of Agility on Organizational Performance

Manoj Kumar[1], Dr.Gaurav Tejpal[2]

[1]Research Scholar , [2]Professor

SHRI VENKATESHWARA UNIVERSITY, GAJRAULA

ABSTRACT

The following document gifts the advantages and disadvantages of utilizing radio-frequency detection (RFID) with deliver string control (SCM). Though RFID offers a lot more rewards when compared with it is precursor, the actual tavern rule, the idea now occurs at a cost of which many organizations nevertheless take into account prohibitive. On one hand, RFID is definitely useful since very easy involve line-of-sight integrating, the idea works to scale back crews quantities, promotes exposure, in addition to elevates products on hand management. However, RFID is definitely at the moment an expensive answer, missing standardization, it offers limited companies building end-to-end alternatives, is suffering from several unwanted deployment challenges, and it is cloudy by simply privateness concerns. Regardless of these kind of elements, the supreme purpose of RFID with SCM would be to view the place connected with item-level checking that should react in order to transform SCM tactics, adding an additional volume of efficiencies nothing you've seen prior seen.

KEYWORD:-SCM, RFID, SUPPLY CHAIN MANAGEMENT

INTRODUCTION

In the era of time-based competition, supply chain must have the ability to meet the demands of customers for ever-shorter delivery times and to synchronize supply during the peaks and troughs of the demand. To have these abilities, supply chain must be responsive to the needs of the market. Responsiveness requires speed and high level of maneuverability, which is also termed as agility. Agility is the fundamental characteristic of a supply chain needed for survival in turbulent and volatile markets, which are becoming norms, as life cycles of product and services has shortened and environmental forces have created additional uncertainly resulting in higher risk in the supply chain management. Getting the right product, at the right time to the consumer is not only the key to competitive success, but also the key to survival. Customer satisfaction and understanding of market place are critical in the management of supply chain agility. Enterprises are continuously paying attention to responding to the customer demand for maintaining a competitive advantage over their rivals. Significant interest has been shown in recent years to the idea of “lean manufacturing”, and the wider concepts of the “lean enterprises”. The focus of the lean approach has essentially been on the elimination of waste or muda. Lean is about doing more with less. Lean concepts work well where demand is relatively stable and hence predictable and where variety is low. Conversely, in those contexts where demand is volatile and the customer requirement for variety is high, a much higher level of agility would be required. Leanness may be an element of agility in certain circumstances, but it will not enable the organization to meet the precise needs of the customer more rapidly (Aitken et al., 2002).

Agility is the business-wide capability that embraces organizational structures, information systems and in particular, mind sets (Katayama and Bennett, 1999; Christopher, 2000). Agility means using market knowledge and virtual corporation to exploit profitable opportunities in a volatile marketplace (Mason-Jones and Towill, 1999).Christopher (2000) has identified a number of characteristics that a supply chain must have in order to be "truly agile". In the literature, various frameworks for improving agility of supply chains have been suggested. For example Bal et al. (1999) propose virtual teaming model for introducing agility in a supply chain. Yusuf et al. (1999) have proposed a conceptual model for the design of agile manufacturing system based on the four key dimensions of strategies, technology, people, and system. Tolone (2000) has supported the role of real time and asynchronous collaboration technology for allowing manufacturers to increase their supply chain agility. Prater et al. (2001) have used case studies to show how firms have successfully made a tradeoff between vulnerability and supply chain agility. Svensson (2001) has stated that lean, responsiveness, and agile supply chains require satisfactory or high levels of perceived trust of companies towards suppliers and customers. Power et al. (2001) have identifies some of the factors critical to successful agile organization in managing their supply chains. Stratton and Wardburton (2003) have explored the role of inventory and capacity in developing agile supply chain for an apparel manufacturer. Yusuf et al. (2004a) have presented a conceptual model for assessing the capability of an agile supply chain, which consists of four dimensions: value chain practice, competitive objectives, impact of change drivers, and business performance. Lau et al. (2003) propose an infrastructural framework for the design and development of an agile supply chain system, which is characterized by its ability to cope up with unpredictable changes related to the management of suppliers and flow of parts within the value chain of the entire production network.

The past studies (Mason-jones et al., 2000a; van Hoek, 2000; Christopher and Towill, 2001) show how the need for agility and leanness depends upon the total supply chain strategy, particularly considering market knowledge, through information enrichment, and positioning of the decoupling point. Combining agility and leanness in one SC through the strategic use of a decoupling point has been termed "le-agility" (Naylor et al., 1999). Therefore, leagile is the combination of the lean and agile paradigms within a total supply chain strategy by positioning the decoupling point so as to best suit the need for responding to a volatile demand downstream yet providing level scheduling upstream from the market place (van Hoek et al., 2001).

Table 1: Definition of Agility

S.N.	Author (s)	Definition of Agility
1.	Goldman et al, (1995)	Define agility as means for delivering value to customers, being ready for change, valuing human knowledge and skills, and forming virtual partnership.
2.	Fliedner and Vorkurka, (1997)	Describe agility as an ability to produce a broad range of low-cost, high quality products with short lead times in varying lot sizes, built to individual customer specification.

3.	Katayama and Bennett (1999)	state that agility relates to the interface between the company and the market.
4.	Christopher (2000)	defines agility as the ability of an organization to respond rapidly to change in demand, both in terms of volume and variety.
5.	Mason-Jones et al. (2000b)	mention that agility means using market knowledge and virtual corporation to exploit profitable opportunities in a volatile market place.
6.	Tolone (2000)	elaborates that agility implies effectively integrating supply chain and forging close and long term relationship with customers and suppliers.
7.	Van Hoek et al. (2002)	state that agility is all about customer responsiveness and market turbulence and requires specific capabilities that can be achieved using 'lean thinking'.
8.	Aitken et al. (2002)	define agility as an ability to have visibility of demand, flexible and quick response and synchronized operations.
9.	Stratton and Warburton (2003)	mention that innovative products and unstable demand typify supply drivers.

2 NEED FOR AN AGILE SUPPLY CHAIN

Markets are now complex open systems that frequently demonstrate high levels of "chaos". Experts, who work in the industry and those who study it, are now gradually accepting that the demand for certain products cannot be forecasted to the satisfaction of decision makers in a supply chain.

In such conditions, managerial effort may be better expended on devising strategies and structures that enable products to be created, manufactured and delivered on the basis of "real-time" demand. This is the context that has spawned the emerging domain of the agile supply chain and the philosophy of quick response (Christopher and Towill, 2001).

Agile supply chains are needed for markets typically exhibiting the following characteristics (Mason-jones et al., 2002: Christopher et al., 2004):

- *Short Life-cycles:* The product is often ephemeral, designed to capture the mood of the moment: consequently, the period in which it will be saleable is likely to be very short and seasonal, measured in months or even weeks.
- *High Volatility:* Demand for these products is rarely stable or linear. It may be influenced by the vagaries of weather, firms, or even by pop stars and footballers.

- *Low Predictability:* Because of the volatility of demand, it is extremely difficult to forecast with reasonable accuracy even for total demand within a period, let alone week-by-week or item-by-item demand.
- *High Impulse Purchasing:* many buying decisions by consumers for these products are made at the point of purchase. In other words, the shopper when confronted with the product is stimulated to buy it; hence there is a critical need for the "availability" of the product.

2.1 Supply Chain Performance Measures

SCM is described as systemic and strategic coordination of organizations involved in supply chain business for the purpose of improving the long-term performance of individual organization and its supply chain. An appropriate supply chain performance (SCP) management system is necessary for firms to successfully implement SCM (Lee and Billington, 1992; Gattorna and Walters, 1996; Marien, 2000). Given that there are different perspectives on the measurement of SCP, many firms find it difficult to effectively evaluate the performance of their activities on a supply chain-wide basis (Cooper et al., 1997).

There are different viewpoints as to what constitutes SCP. "Cost" is traditionally the primary performance criterion (Cohen and Lee, 1988, 1989; Lockamy III and Smith, 2000). In the past, costs of inventory, transportation, and production received greater than other performance criteria. However, these cost-related performance criteria are "non-integrated' and therefore fail to consider chain-wide opportunities to improve performance. As market competition intensifies, cost considerations are no longer the only concern in modern business operations. For instance, Bechtel and Jayaram (1997) advocate the use of integrated measures, is the cash-to-cash cycle that spans functional and organizational boundaries to show all members firms how the chain performs and fosters incentives for firms work with other in chain. By contrast, the non-integrated measures only provide insights into potential problem within individual firm in a supply chain. In additional, Beamon (1999) suggests a framework for combining cost and other criteria, such as customer service and responsiveness to the environment for SCP measurement. The emerging stream of literature SCM suggests that SCP is composed of multiple dimensions, including time and speed (Towill, 1996), agility and flexibility (van Hoek et al., 2001), and quality and productivity (Stainer, 1997). Spekman et al. (1998) discuss the principles on which successful implementation of supply chain management is based. Gunasekaran et al. (2004) present a framework for measuring the strategic, tactical and operational level performance in a supply chain. In this framework, emphasis is on performance measure dealing with suppliers, delivery performance, customer service, and inventory and logistics costs in a SCM. Beamon (1999) presents a framework for the selection of performance measurement systems for manufacturing supply chains and an overview and evaluation of the performance measure used in supply chain models. Neely et al. (1995) suggest quality, time, flexibility and cost as few categories of performance measures but they further point out the need for a generally applicable systematic approach to performance measurement. Performance measurement can provide important feedback information to enable managers to monitor performance, reveal progress, enhance motivation and communication, and diagnose problems (Waggoner et al., 1999); Jharkharia and Shankar, 2001). Holmberg

(2000) proposes that adopting criteria for evaluation SCP should be considered from a systems' perspective. Maximizing lead-time, agility for quality in a single firm seems inadequate to measure SCP without due consideration to the performance requirement of its trading partners. Holmberg (2000) further adds that fragmental measures provide little information and might even be harmful to decisions because the context is missing. To overcome SCP measurement problems, Li and O'Brien (1999) suggest a model for analyzing SCP at two levels, namely the chain level and the operational level. At the chain level, objectives associated with the criteria are set for each stage of the supply chain so that the SCP can meet the customer service targets and the best supply chain strategy is selected. At the operational level, manufacturing and logistics activities are optimized under the given targets (Rabinovich et al., 1999). McCarthy and Golicic (2002) reveal unique approaches to collaborative forecasting that circumvent the inhibitors of collaborative planning, forecasting and replenishment adoption and yield substantial improvement in responsiveness, assurance of product availability, optimized inventory and associated costs, and increased revenues and earnings.

2.2 Hypotheses on Issue of Agility and Trust of Supply Chains

Following hypothesis have been formulated for the study

Hypothesis 1: Agility significantly affects the organizational performance.

3 QUESTIONNAIRE DEVELOPMENT

To address the issues related to agility in Indian industry, a questionnaire-based survey was undertaken. The questionnaire was designed keeping in view the available literature and the previous surveys. The practicing managers and academicians in the area of SCM were also consulted during the development of the questionnaire.

The questionnaire was tested for two main types of validity, which are content validity, and construct validity. Content validity represents the adequacy with which a specified domain of content is sampled (Nunally, 1978) and that the instrument item has items that cover all aspects of the variables being measured. Content validity cannot be determined numerically. Its determination is subjective and judgmental. It primarily depends on an appeal to the propriety of content and the way it is presented (Nunally, 1978). The instrument developed in this study demonstrates the content validity as the selection of measurement items was based on both, an exhaustive review of the literature md evaluation by academicians and practicing managers during its pre-testing. The content validity was further tested during pilot survey as per the guidelines provide by Forza (2002), After a careful review of respondents' answers to the questionnaire during pilot survey, some questions were modified to convey their intended meaning, and few questions were deleted from the questionnaire as per the suggestions received from the respondents. The construct validity was conducted through an exploratory factor analysis. Factor analysis was conducted to test the uni-dimensionality of the multi-items perceptual measures. As per the suggestion of Kim and Muller (1978) only those items, which had a factor loading of more than 0.40 were used in the questionnaire.

The twenty four items/questions, covering three subscales, meant to measure the existing level of supply chain agility are explained below:

Table 2 shows only those items which have factor loading more than 0.5 with no cross loading.

Table 2: Exploratory factor analysis of agility in sourcing, operations in delivery

S.N.	Item Code	Factor Loading		
		Agility in sourcing	Agility in operations	Agility in delivery
1	SA3	0.621		
2	SA4	0.780		
3	SA5	0.826		
4	SA6	0.620		
5	PA14		0.731	
6	PA16		0.773	
7	PA17		0.710	
8	PA18		0.664	
9	DA20			0.748
10	DA21			0.721
11	DA22			0.804
12	DA23			0.702

4 RELIABILITY OF THE QUESTIONNAIRE SURVEY

Cronbach's coefficient (alpha, α) has been used to evaluate construct reliability (Flynn et al., 1990). Value of alpha was calculated to test the reliability and internal consistency of the responses for the present study. Alpha with value equal or greater than 0.50 has been recommended for reliability by Nunnally (1978). Since cronbach's alpha values for all the factors have been found in ranges from 0.704 to 0.911 as mentioned in Table 4. All values have been accepted and established the reliability of the measurement scale for all the variables considered.

Table 3: Exploratory factor analysis of organizational performance

S.N.	Item code	Factor loading
1	SCPOP3	0.860

2	SCPOP4	0.829
3	SCPOP7	0.834
4	SCPOP8	0.608
5	SCPOP9	0.834

Table 4: Reliability analysis of all constructs before and after EFA

S.N.	Construct	Cronbach's alpha value after EFA
1	Agility in Sourcing	0.804
2	Agility in Operations	0.817
3	Agility in Delivery	0.812
11	SCPOP	0.911

4.1 Establishing the construct for supply chain agility

Table 5 shows the items for each construct on agility along with the cronbach's alpha.

Table 5: Summary of EFA for supply chain agility

S.N.	Construct	Number of items after EFA	Cronbach's alpha
1	Agility in sourcing	4	0.719
2	Agility in operations	4	0.771
3	Agility in delivery	4	0.751

4.1.1 Measurement model for sourcing/procurement agility

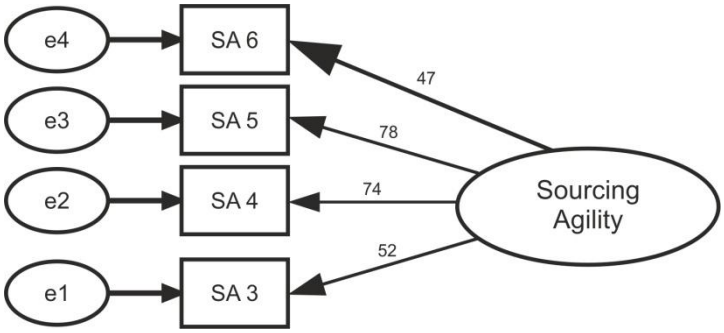

Figure 1: Standardized measurement model for sourcing agility (SA)

Figure 1 shows the sourcing agility with its manifest variables. Table 6 shows that all statements bear significant relationship with the variables evident from column marked as P value.

Table 6: Regression weights for sourcing agility

S.N.	Relationship			Estimate	S.E.	C.R.	P
1	F3	<---	Sourcing_ Agility	1.000			
2	F4	<---	Sourcing_ Agility	1.247	0.279	4.32	***
3	F5	<---	Sourcing_ Agility	1.410	0.318	4.21	***
4	F6	<---	Sourcing_ Agility	0.758	0.134	3.214	***

*****p<0.001**

Table 7: Model fit indices for measurement model of sourcing agility

S.N.	Indices	Model indices: sourcing agility
1	(χ2)/df/=CMin/df	0.419
2	GFI	0.987
3	CFI	1.00
4	RMR	0.027
5	RMSEA	0.000

4.1.2 Measurement model for production agility

Figure 2 shows the production agility with its manifest variables. Table 8 shows that all statements bear significant relationship with the variables.

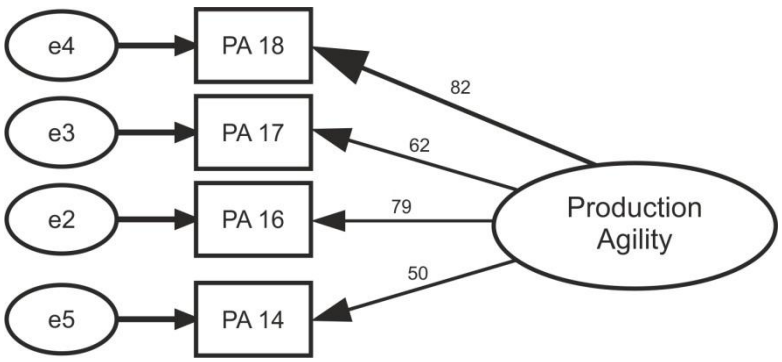

Figure 2: Standardized measurement model for production agility (PF)

Table 8: Regression weights for production agility

S.N.	Relationship	Estimate	S.E.	C.R.	P
1	PA16 <--- Production_Agility	1.321	0.321	4.212	***
2	PA17 <--- Production_Agility	1.139	0.259	4.321	***
3	PA18 <--- Production_Agility	1.421	0.312	4.943	***
4	PA14 <--- Production_Agility	1.000			

*****p<0.001**

Table 9: Model fit indices for measurement model of production agility

S.N.	Indices	Model indices: production agility
1	(χ2)/df=CMin/df	0.114
2	GFI	0.917
3	CFI	1.00
4	RMR	0.003
5	RMSEA	0.000

4.1.3 Measurement model for delivery agility

Figure 3 shows the delivery agility with its manifest variables.

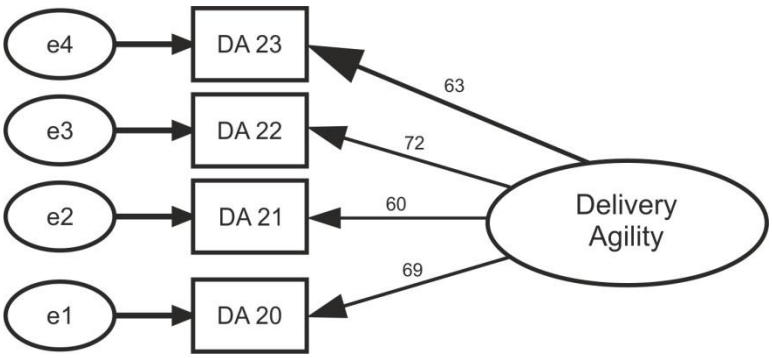

Figure 3: Standardized measurement model for delivery agility (DA)

Table 10: Model fit indices for measurement model of delivery agility

S.N.	Indices	Model indices: delivery agility
1	(χ2)/df/=CMin/df	0.579
2	GFI	0.992

3	CFI	1.00
4	RMR	0.005
5	RMSEA	0.000

4.2 Establishing the construct for the organizational performance

The organizational performance construct was initially represented by single dimensions and 10 items, covering market and financial goals. The ten items have been exposed to factor analysis. Items with factor loading more than 0.50 have been taken for CFA.

Table 11: Summary of EFA on organizational performance

S.N.	Construct	Number of items after EFA	Cronbach's alpha
1	Organizational Performance	5	0.869

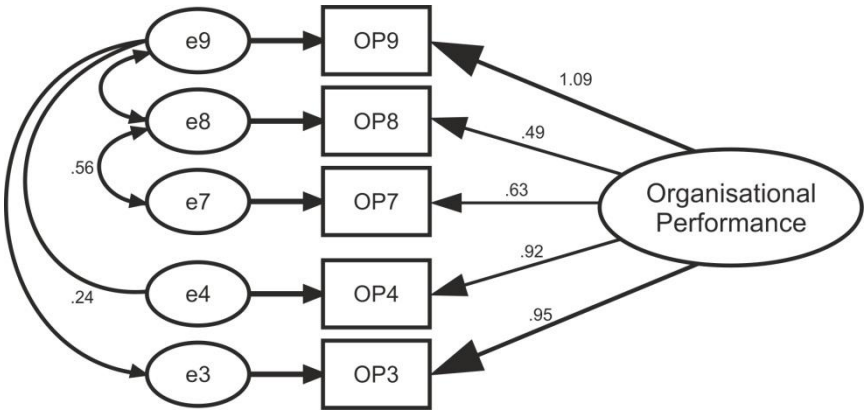

Figure 4: Standardized measurement model for organizational performance

Figure 4 shows the organizational performance with its manifest variables. Table 12 shows that all statements bear significant relationship with the variables under P column. Apart from this Table 12 shows the estimates, standard error and critical ratio.

Table 13 highlights the model fit indices for organizational performance.

Table 12: Regression weights for organizational performance

S.N.	Relationship			Estimate	S.E.	C.R.	P
1	OP3	<---	Organisational_Performance	1.000			
2	OP4	<---	Organisational_Performance	1.174	0.080	13.112	***

S.N.	Relationship			Estimate	S.E.	C.R.	P
3	OP7	<---	Organisational_Performance	1.067	0.139	7.881	***
4	OP8	<---	Organisational_Performance	0.687	0.132	5.655	***
5	OP9	<---	Organisational_Performance	1.367	0.229	6.080	***

*****p<0.001**

Table 13: Model fit indices for measurement model of organizational performance

S.N.	Indices	Model indices organizational performance
1	(χ2)/df/=CMin/df	3.6
2	GFI	0.931
3	CFI	0.972
4	RMR	0.025
5	RMSEA	0.0231

The average value of standard regression weights for organizational performance has been found to be 0.819, this provided the strong evidence of convergent validity among the theoretical construct for organizational performance. Therefore, it can be said that all items are significantly related to their underlying theoretical constructs, organizational performance in this case.

4.3 Testing of hypotheses on organizational performance

The section has presented the results of the hypotheses tests, formulated on organizational performance with all independent variables

4.3.1 Testing of hypotheses for sourcing agility, production agility and delivery agility on organizational performance

The structural model for sourcing agility, production agility and delivery agility with organizational performance has been illustrated by Figure 5. Results are presented in Table 14. Out of hypothesized relationships, one is found significant and thus supported, whereas other two are not. As inferred in Table 14, hypotheses H4b is supported, and H4a and H4c are not supported.

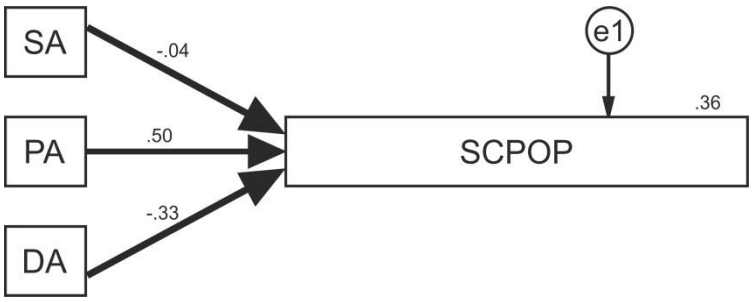

Figure 5: Structural model (standardized values) for SF, PF, and DF with SCPOP

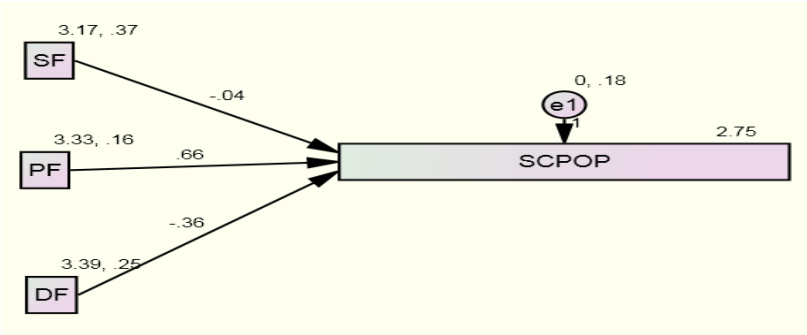

Figure 6: Structural model (unstandardized values) for SF, PF, and DF with SCPOP

Following equation has been generated from Figure 6.

SCPOP= 2.75-0.04 (SF) +0.66 (PF) -0.36 (DF) (6.6)

Table 14: Summary statistics for hypotheses H4a, H4b, H4c

S.N.	Hypotheses	Relationship	AMOS coefficients (standardizes regression weights)	Estimate	S.E.	C.R.	P	Support
1	H3a	SCPOP <---- SA	-0.044	-0.039	0.065	-0.597	0.551	No
2	H3b	SCPOP<----- PA	0.500	0.664	0.099	6.737	***	Yes
3	H3c	SCPOP <--- DA	-0.331	-0.356	0.080	-4.456	***	No

*****p<0.001**

Hypothesis H3a (i.e., 'Agility in procurement significantly and positively affects organizational performance') has been found insignificant and thus not supported. This indicates that the sourcing agility of a firm in Indian context did not affect organizational performance. Hypothesis H3b (i.e., 'Agility in production significantly and positively affects organizational performance') has been found significant and thus supported.

5 IMPLICATIONS OF THE STUDY FOR MANAGERS/PRACTITIONERS

Several implications have been inferred out of the present study, which are important for managers and practitioners. Few important suggestions for organizations/managers are as follows:

- It is realized that to enhance SCPOP through agility, managers should focus on the production and delivery dimensions of supply chain for organizational performance.

CONCLUSION

That document evolves a well-balanced scorecard to get present archipelago managing (SCM) this procedure as well as evaluates day-to-day company functions out of pursuing a number of aspects: fund, shopper, inside company procedure, as well as mastering as well as growth. Well-balanced scorecard have been created dependant on in depth report on novels upon SCM functionality procedures, held up by some situation reports, each one demonstrating ways that they BSC began as well as utilized for small , medium-sized companies (SMEs) throughout India. The particular document additionally implies that a well-balanced SCM scorecard could possibly be the basis for the arranged SCM program offered that a person growth pointers will be accurately put into practice, ideal achievement will be looked at, as well as important execution obstructions will be overcome. The particular nicely balanced scorecard created in the following document presents a beneficial suggestions for your useful executives throughout evaluate as well as calibrating with SCM throughout a well-balanced manner as well as states a well-balanced functionality statistic program to help road as well as review present chains. Though indicating nicely balanced scorecard, diverse SCM functionality achievement are already researched as well as spread within a number of perspectives. This can help executives to observe SCM functionality in a very much-balanced manner from sides with business.

REFERENCE

[1]. Barad, M., and Even Sapir, D. (2003), “Flexibility in logistics system-modeling and performance evaluation”, International Journal of Production Economics, Vol.85, pp. 155-170.

[2]. Beamon, Benita M. (1996), “Performance Measures In Supply Chain Management”, Proceedings of the Conference on Agile and Intelligent Manufacturing Systems, Troy, NY.

[3]. Beamon, B.M. (1999), “Measuring supply chain performance”, International Journal of Operations and Production Management, Vol. 19, No. 3, pp. 275-292.

[4]. Beamon, B.M., and Ware, T.M. (1998), “A process quality model for the analysis, improvement and control of supply chain systems”, Logistics Information Management, Vol. 11, No. 2, pp. 105-113.

[5]. Bechtel, C., and Jayaram, J. (1997), “Supply Chain Management: A Strategic Perspective”, International Journal of Logistics Management, Vol. 8, No. 1, pp. 15-34.

[6]. Behnezhad, A.R. (2000), “New developments in supply chain management”, Proceedings of the 12th Annual CSU-POM Conference, California, California State University, Sacramento, pp. 25-26.

[7]. Bharadwaj, A.S. (2000), “A resource-based perspective on information technology capability and firm performance: an empirical investigation”, MIS Quarterly, Vol. 24, No. 1, pp.169–196.

[8]. Bhattacharya, R., Devinney, T. and Pillutla, M. (1998), "A formal model of trust based on outcomes, (special topic forum on trust in and between organizations)", Academy of Management Review, Vol. 23, No. 3, pp. 459-73.

[9]. Boulaksil Y., Grunow M., and Fransoo, J.C. (2011), "Capacity flexibility allocation in an outsourced supply chain with reservation", Int. J. Production Economics, Vol. 129, pp. 111–118.

[10]. Braunscheidel, M. J. and Suresh, N. C. (2009), "The organizational antecedents of a firm's supply chain agility for risk mitigation and response", Journal of Operations Management, Vol. 27, pp. 119–140.