5th International Conference on Research Developments in Applied Science, Engineering & Management (AEM- 2019)

Mahratta Chamber of Commerce, Industries and Agriculture ,Pune (India) AEM- 2019

23rd February 2019, www.conferenceworld.in ISBN: 978-93-87793-72-9

STUDY OF PIEZOELECTRICITY AND TESTING THE EFFICINECY USING SOUND SENSOR

Surekha Dixit[1], Mihir Tale[2], Tanya Agrawal[3], Shashwati Tidke[4], Sanket Umredkar[5], Devesh Taori[6]

[2-6]Students, Department of Engineering, Sciences and Humanities (DESH),

Vishwakarma Institute of Technology, Pune, Maharashtra, India

[1]Professor, Department of Electrical Engineering,

Vishwakarma Institute of Technology, Pune, Maharashtra, India

ABSTRACT

Energy harvesting is an essential technology for using any of the equipment which require power to be operated, and thus has attracted a great deal of attention in recent years. Piezoelectric Power harvesting is a very important term in electronics. Power harvesting may be defined as a process of obtaining energy surrounding a system and converting it into electrical energy for use. Piezoelectric energy harvesting is one of the most reliable and efficient method. The crystalline structure of piezoelectric materials has the ability to convert mechanical strain energy into electrical energy. It also has the ability of converting electrical potential energy into mechanical strain. In this experiment we have studied the potential difference and hence the current produced due to application of pressure on the piezoelectric plates, this helps us know how pressure should be applied on piezoelectric plate to get desired output. Also, we showed how these piezo can be used as burglar alarm. Later, we found a way to find the efficiency of energy conversion of the piezo buzzer which has a piezoelectric plate using sound sensor and Arduino and showed how the efficiency of the piezo buzzer varies with the frequency of the note which is being played on it.

Keywords – Arduino, Energy Harvesting, Energy Efficiency, Mechanical Stress, Piezoelectricity.

1. INTRODUCTION

Piezo electricity is the amount of electrical charge gathered due to mechanical strain applied on it. With the advancement in technology and the generated need of micro mechanical, portable and electrical device, has led to need of many electronic devices. It also becomes more essential for the portable devices to carry power supply of their own along with them. The most common battery is the conventional battery used for this purpose. The power generation from mechanical vibration uses vibration neighbouring the power harvesting device which is used as an energy source and converts it into useful electrical energy in order to power other devices. The idea of gathering the energy surrounding an electronic system and converting it into usable electrical energy that could increase the lifetime of the power supply has captivated many researchers and brought much attention to power harvesting. One method of obtaining the energy in such a manner is to use piezoelectric materials. Piezoelectric materials have unique characteristics to change electrical to mechanical energy and vice versa. This property allows them to be uses to absorb the mechanical energy produced by vibration or any sort of strain applied, and transform it into electrical energy that can be used to power other

 ISBN: 978-93-87793-72-9

devices. We can also store the energy generated by the piezo electrical materials that can be utilised ahead. They are reliable and convenient to use. The basic concept of piezo ceramic is that the mechanical strain applied on to the ceramic piezo converts it into electrical energy. In the present-day scenario, where there is great demand for energy and power, these piezo electrical materials can be of great use.

2. LITERATURE REVIEW

In recent years, a lot of research has gone into the topic of piezoelectricity and its applications. LIU Xiangjian et al (2012) concluded that both, the shape parameters and elastic modulus exert great influence on energy conversion efficiency of any piezoelectric materials. [1] Yamuna. M. B et al (August 2014) said that Piezoelectric energy harvesting have a great need in today's life. [2] Ji Wang et al (April 2000) said that the need for a precise prediction of vibration frequency, electric properties, and thermal stability is universal in many systems for sensing, actuating, and filtering applications where piezo technology can come into scope. [3]

3. METHODOLOGY

3.1 Theory

Piezoelectric materials are used as means of accumulating energy from the surroundings i.e. all the energy generated around us. Without gathering enough amount of energy, the power harvesting system will not be an accurate power source for most electronics. The conventional batteries have been used as power sources of most electricity driven devices. However, the limited lifetime and capacity of batteries have made traditional batteries not appropriate for some power critical or maintenance free applications such as the wireless sensor, orthopaedic implants, etc. The piezoelectric method to power harvesting has several advantages like: their small size and the flexibility to be fabricated in various shapes. Earlier, technologies using piezoelectric power generation have focused on generic power generation (i.e. for any low-power electrical device). These studies have shown that sufficient power can be generated from a piezoelectric device in an ordinary shoe to power a small battery over several meters during walking. However, on testing this, it was found that it would take a lot of time to charge a battery, hence better uses of piezoelectrical crystals were needed. This work on Piezoelectricity has led to the making of compact, easy to use and profitable system wherein everyday activities of humans such as walking, jogging, running etc. can be used in production of electrical energy.

Also, the current produced by these piezo plates can be studied by connecting it to Arduino Nano and plotting graph between analog value received by the Arduino with respect to time.

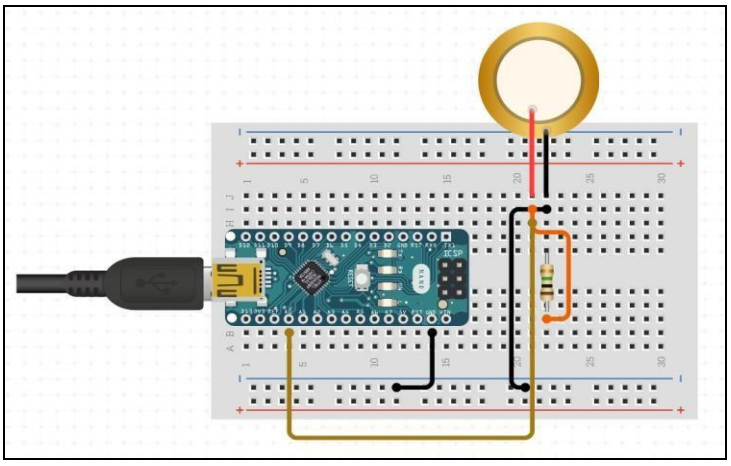

Arduino Nano connected to a Piezo Crystal

 ISBN: 978-93-87793-72-9

Output:

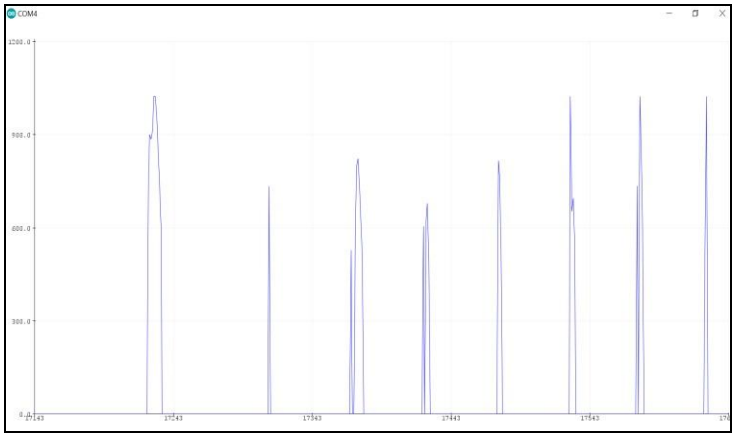

3.2 Components used

1. Piezoelectric crystals
2. Wires
3. LED
4. 33 µF Capacitor
5. 1N4007 Diodes
6. Arduino Nano
7. Bread Board
8. Digital Multimeter (DMM)
9. Sound Sensor

3.3Efficiency

Harvesting efficiency of a piezoelectric vibration energy harvesting system is measured to provide design guidelines for harvesting devices with best performance. Harvesting power efficiency (η), is defined as the ratio of device output power (P_{out}) to mechanical input power (P_{in}). We have calculated the efficiency of a piezoelectric plate by passing it an alternating current which makes it expand and shrink alternately producing sound waves. The frequency of alternate expansion and shrinking can be controlled by the means of an Arduino microcontroller, by playing any note (i.e. c7, d4) with its corresponding frequency on piezo buzzer. This frequency is same as the frequency of alternating current given to piezo through Arduino. We have used Arduino Nano in this experiment. We know that for a sound wave $dB=10log(P_2/P_1)$. Here, P_2 and P_1 are input(P_{in}) and output(P_{out}) power respectively. Hence, the formula can be rewritten as $dB=10log(n)$where, n is the efficiency which the ratio of input power and output power. But the sound sensor module just gives ADC values as an input to Arduino. Practically, these values have no relation with dBin such case we can utilize *linear regression method.* Initially, we can use a sound level meter to find actual dB and then the ADC valuescorresponding to it. The plot of ADC vs. dB is approximately:

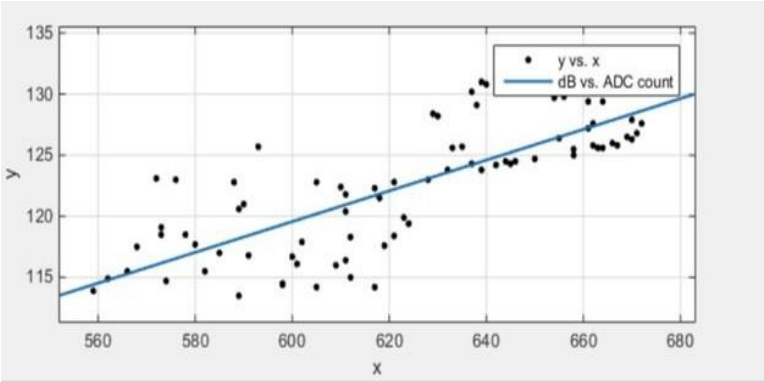

From which it is possible to calculate dB corresponding to givenADC. Knowing dB,efficiency of the piezo transducer can be calculated using sound meter.

The equation that was found by testing:

dB = 0.1258*(ADC count) + 44.06

Studies have shown that very little energy is produced, generally around 0.00001 joules. As a comparison, a cell phone battery stores around 18,000 joules of energy.

3.4Applications

Since the Energy harvested by a piezoelectric crystal is so low, instead of using it only for energy harvesting, we can use it for a variety of other applications, that do not just rely on the amount of energy generated by a piezo but on the fact that certain energy is generated, this can be in sensors.

Piezo-based Alarming System Using Arduino —

When mechanical strain (i.e. impulse) is applied on the piezoelectric plates, current is produced. This current is proportional to the value of the pressure applied. If this current is passed to a microcontroller, we can know what kind of object hit the piezo plates, this has lot of applications. One of them could be a burglar-alarm. Our idea is to place a long sheet of such plates along the fence/walls of the compartment on the inner side, if anyone tries to cross the wall/fence by jumping over it, the piezo plates will receive an impulse and the current produced will be passed on to the microcontroller. We have used Arduino Nano R3 microcontroller. According to the value of current received to the microcontroller it will classify it as a person, cat, dog etc. by setting a threshold to it. If it is identified to be person, it'll trigger an alarm. Such system can be used at night in order to guard houses, museums, or any official buildings.

Pressure Sensors — In any application requiring the measurement of dynamic pressure changes, using piezoelectric pressure sensors gives more faithful results than using conventional electrical or mechanical pressure sensors. This is because piezoelectric devices have a high rate response and signal conversion without type of mechanical connection in conjunction with a strain gage or displacement sensor. These sensors could further be used in roads to measure the traffic density. In motion detection sensors. These could be installed in buildings and could alert the authorities about any suspicious movement.

Piezoelectric Motors — One advantage of using piezoelectric materials is that they are precise and predictable. Thus, expansion and contraction of a piezoelectric material can be controlled as long as the

 ISBN: 978-93-87793-72-9

supply voltage is controlled. Some motor designs take advantage of this fact by using piezoelectric elements to move a rotor or linear element in precise additions. Precision up to a few nanometres can be achieved with some piezo motor designs. Though piezo motors work at a wide range of frequencies but they work best in a low frequency range.

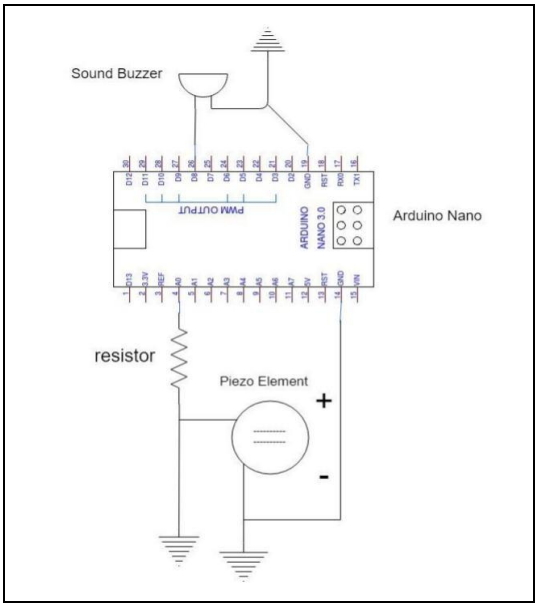

Piezoelectric motors can be used in surroundings with strong magnetic fields or very high or low temperatures — environments where normal motors may not work. These unique challenges are present in NMRI machines, particle accelerators, and other similar machines.

Piezoelectric Buzzers — Piezoelectric buzzers work just like piezoelectric speakers, but they are usually designed with lower reliability to produce a louder volume over a more precise frequency range. Buzzers are used in infinite number of electronic devices, including intruder alarms, medical devices, alarm clocks, fire alarms, etc.

Speed Breakers – Though the amount of energy generated by a piezo electrical material is not much, but we know that the amount of energy generated is directly proportional to the amount of strain generated. If we install these materials in speed breakers, the impulse generated by moving vehicles can produce a lot of energy. This energy can be stored and utilised to power many equipment.

4. LIMITATIONS

The amount of energy generated by a single piezo electric crystal is very less and it is difficult to attain high efficiency. Thus, the amount of crystals required to charge appliances is very charge in number and takes a lot of time. Thus, the main limitation is that they are not very good energy harvesting devices.

5. FUTURE SCOPE

The major setback in the use of piezoelectricity is that not enough impulse is created to generate more amount of energy, if these materials are installed in speed breakers and on the roads, due to the heavy weight and continuous traffic, lot of energy generation is possible, without use of any labour. Also, these

 ISBN: 978-93-87793-72-9

materials can be used in various devices such as key boards, tennis racquets, roads, railway stations or any place where a lot of energy can be generated due to the momentum created. This energy is not be utilised to the maximum extent.

6. CONCLUSION

Piezoelectricity is a smart source of energy. It has limited application right now, but has a lot of scope in future and can be used not just to generate power but also to detect motion and in many other appliances.

7. DEMONSTRATION

7.1. Energy Harvester

7.1.1Circuit Diagram

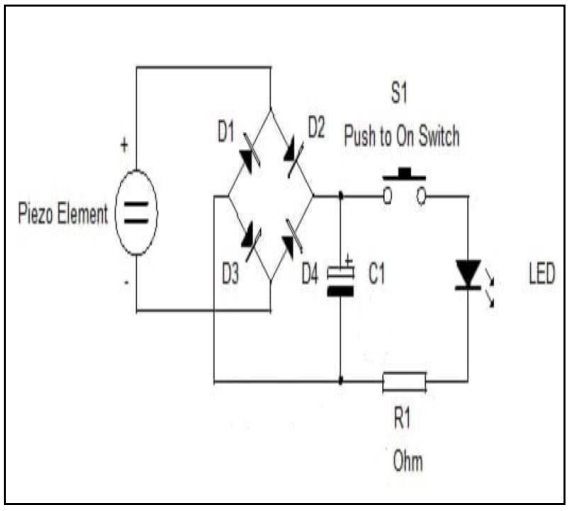

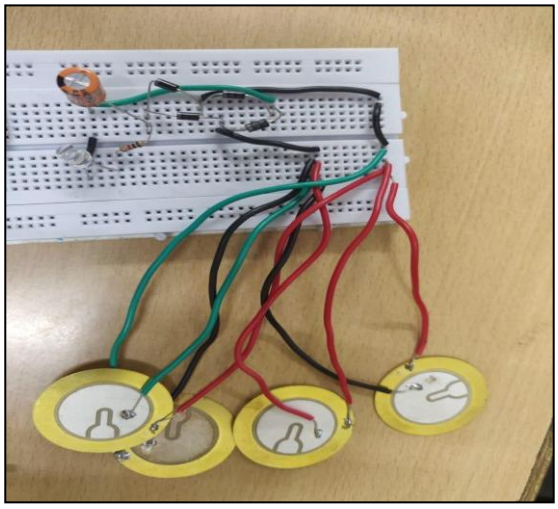

7.1.2 Current-Time Graph plotter and Alarming System Using Arduino and Piezo Pressure Sensors

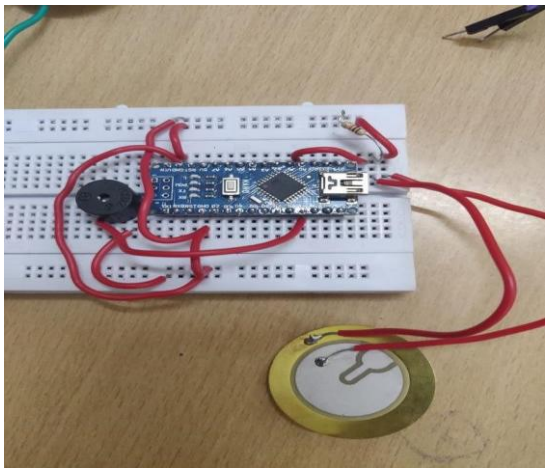

8. AKNOWLEDGEMENT

We will like to express our sincere gratitude towards the director of our college, Dr. Rajesh Madhukar Jalnekar, for constant support. We would like to express our gratitude towards the head of our department, Prof. Dr. C.M. Mahajan. We would like to thank our Guide, Ms. Surekha Dixit for helping us in completion of the project and guiding us throughout.

9. REFRENCES

[1] Energy Conversion Efficiency of Rainbow Shape Piezoelectric Transducer - LIU Xiangjian, Chinese Journal of Aeronautics 25 (2012) 691-697

[2] Design of Piezoelectric Energy Harvesting and
Storage Devices - Yamuna. M. B1, K. Shanmukha Sundar, International Journal of Advanced Research in Electrical, Electronics and Instrumentation Engineering (August 2014).

[3] https://www.americanpiezo.com/blog/top-uses-ofpiezoelectricity-in-everyday-applications/

[4] https://www.instructables.com/id/PiezoelectricGenerator-1/

[5] http://iopscience.iop.org/article/10.1088/09641726/24/5/055006

[6] https://circuitdigest.com/microcontrollerprojects/arduino-sound-level-measurement

[7] https://www.youtube.com/watch?v=vnGX99jhcxc