International Conference on Recent Innovations in Applied Science, Engineering & Technology
(IEI, Mumbai) The Institution of Engineers, Mumbai, India (AET-2018) Conference World
16th-17th June 2018 www.conferenceworld.in ISBN : 978-93-87793-30-2

THREE PHASE GRID CONNECTED POWER SUPPLY USING RENEWABLE ENERGY SOURCES: SOLAR AND WIND

Shikha Soni[1], Komal Arora[1], Diksha Gupta[1]

[1]*Department of Electrical Engineering, Govt. Women Engineering College, Ajmer, (India)*

ABSTRACT

The generation of energy with the help of renewable energy sources is becoming very popular. In the context of RES, the addition of many renewable energy sources such as wind power, PV system, biomass hybrid power system has gained importance due to condition for minimization of the variability and availability of input energy at very low cost. Now-a-days, advancement in the system control have reduced the rate of investment in renewable energy sources and maximization of extracted power is possible. This helps us to better management of energy with reduced cost. This paper presents a hybrid power system (PV system, wind system with MPPT techniques) to supply a variable load with the help of PWM inverter and a simulation model of the same is present in Simulink MATLAB.

Keywords: RES SYSTEM, PV ARRAY, BOOST CONVERTER.

I. INTRODUCTION

The generation of energy with the help of renewable energy sources is becoming very popular due to environment concerns. The demand of energy is increasing day by day. With the increasing environmental concerns and dwindling fossil fuels reserves there has been an exponential decrease in the price of solar module making them promising source of electricity generation. Among all the available renewable sources, solar energy is expected to obtain the largest portion in the upcoming future because of its numerous advantages like environment friendly, abundance etc. Lately, there has been an increasing trend to look for hybrid power systems as a way to avoid high investment in public grid connections, it also reduces the energy bill considerably and improves the overall transmission and distribution capacity [1,2].

Historically, diesel generators were used as an alternative but due to rising price of fuels and transportation difficulties of diesel, these diesel generators are now replaced by batteries as a way to make systems with energy storage in order to improve the overall stability and reliability of the system. However, the hybrid system several components are integrated such as wind power, solar power, biomass energy, hydro energy, tidal energy which

in turn increase the overall complexity of the system but with the help of hybrid system the all over cost of the electricalenergy can be reduced. Block diagram of hybrid model is presented in fig.1

There are too many advantages of hybrid system it is easy to install and maintain. Wind-Solar hybrid system cover all application like off grid, on grid, rural electrification, telecom, water purification and water pumping and many more.

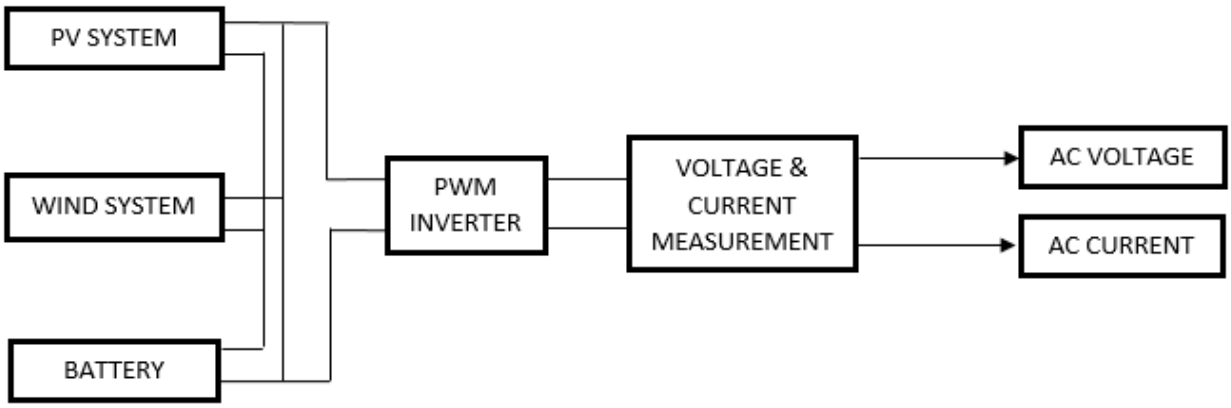

Fig. 1 Block diagram of hybrid system

The objective of this work is to develop a wind-solar hybrid system in a view to improve the reliability on the energy being delivered. Here in this paper a prototype of hybrid power system has been made with 4 kW wind generator, a 3 kW PV panel, a 500W grid connected inverter [2]. The above described system has been designed and simulated in MATLAB Simulink environment.

The organization of this paper is as follows. Section II describes about the PV system with MPPT algorithm. In Section III, Wind system has been described. Section IV described about boost converter. Section V details about PWM inverter. In section VI simulation results is shown, in section VII conclusion and future scope of work is observed.

II. PV SYSTEM

A photovoltaic system is a power system. It converts solar radiations into electricity. A PV system consists of many PV module in which many PV cells are wired in parallel to increase current and in series to increase voltages. A PV cell made up of thin semiconductor wafer, generally highly purified silicon. The most commonly used block in PV cell is one diode equivalent circuit as presented in fig. 2

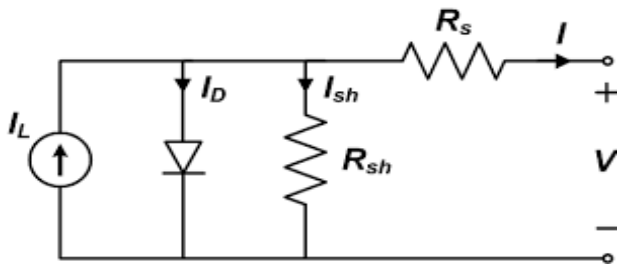

Fig. 2 Equivalent circuit model of PV cell with one diode

The relationship between output voltage (V) and the input voltage (I) are:

$$I = I_L - I_O * \left\{ \exp\left(\frac{q}{nkT_c} (V + IR_S) \right) - 1 \right\} - \frac{V + IR_S}{R_{sh}} \qquad (1)$$

where I is the load current(A), I_o is the saturation current(A), I_L is the Light Current(A), V is the output voltage(V), R_s is the series resistance(Ohms), R_{sh} is the shunt resistance(Ohms) [10].PV module has I-V characteristic which is depends on various factors such as Short Circuit Current (output current of solar cell when the external circuit is shorted), Open Circuit Voltage (output voltage of solar cell when the external circuit is open), Fill Factor (the ratio of maximum power and the product of short circuit current and open circuit voltage). The simulation diagram of PV array and the I-V curve of PV array is presented in fig.3 and fig.4 respectively.

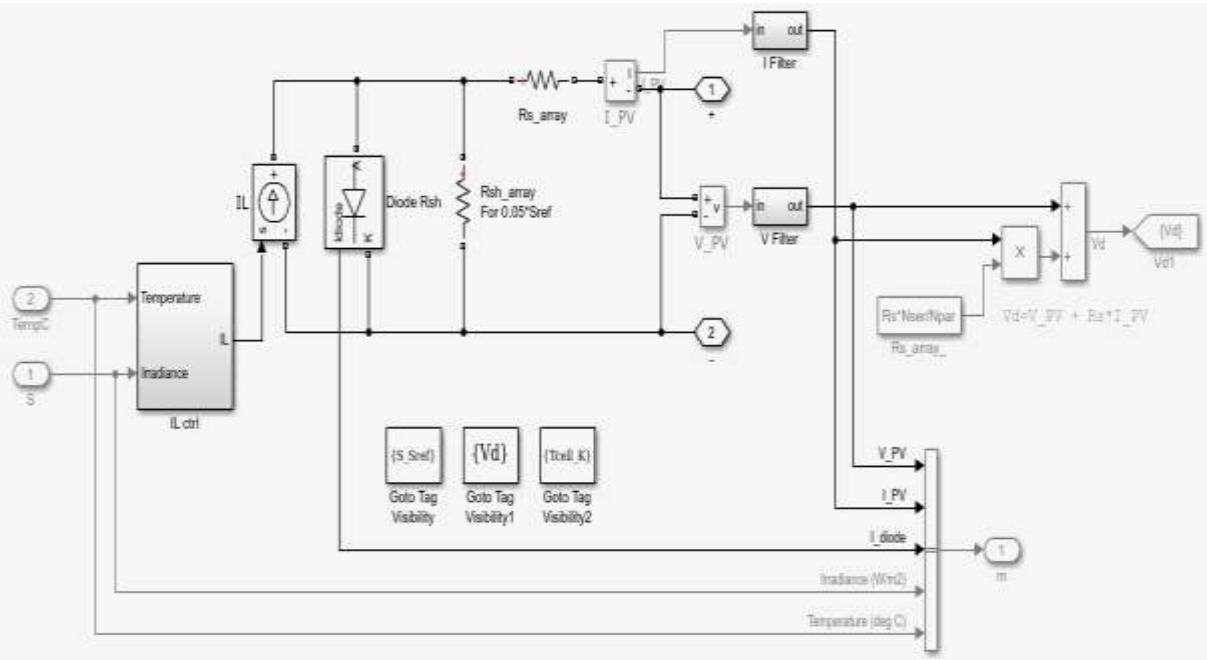

Fig. 3 Simulation diagram of PV array

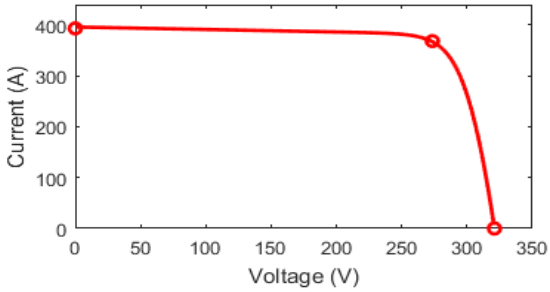

Fig. 4 I-V characteristic of PV Array

III. MPPT

The most common technique used in the MPPT controller is Perturb and Observe (also known as P&O) technique. It is one of the type of hill climbing method. This based on perturbing the voltage in small steps and observing the power [11].

This algorithm is operating on varying the duty cycle of the buck converter, thus varying the output voltage of PV array and observing the resulting power to increase and decrease the duty cycle in the next cycle. If power increase by increasing the duty cycle the direction of perturbation signal is same as the previous cycle and if perturbation produces a decrease of power then the direction of perturbation signal is opposite from the previous cycle. The flowchart of P&O is presented in fig.5

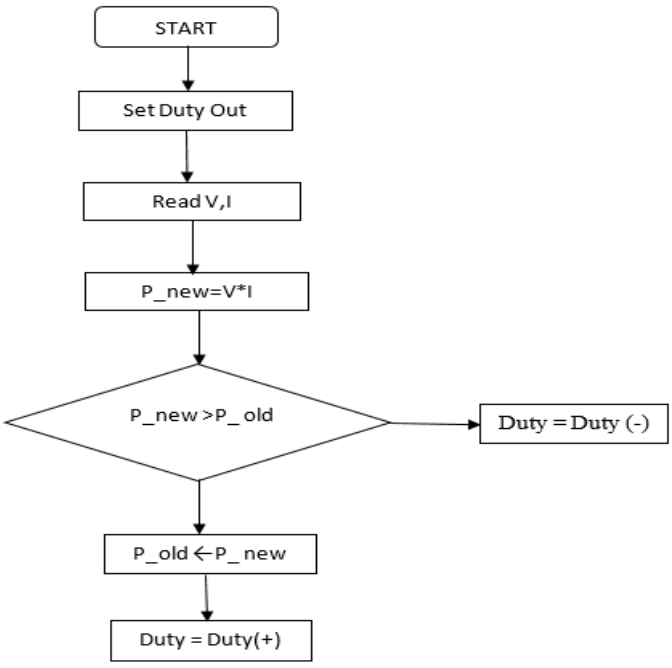

Fig. 5 Flowchart of Perturb and Observe Algorithm

P&O algorithm has too many advantages like simple as compared to other MPPT techniques.Other techniques of MPP (fuzzy logic control, neural network, fractional open circuit voltage, fractional open circuit current, current sweepetc.) yields a local maximum and give an approximated MPP, not the exact one.It is used because of ease of implementation and good performance. It is easy to understand. The P-V curve of photovoltaic array is presented in fig. 6.

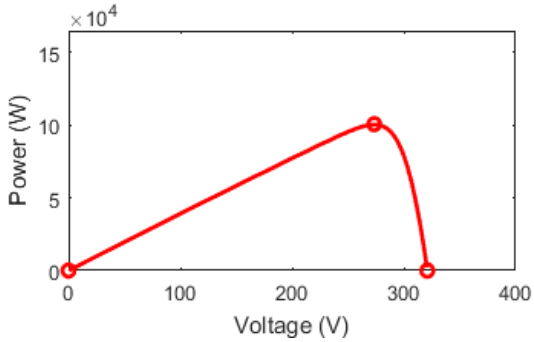

Fig. 6 P-V curve of PV Array

IV. WIND SYSTEM

Wind energy system convert the kinetic energy of wind into electrical energy. In this model the wind system consists of a small turbine coupled to a multipole permanent magnet synchronous generator (PMSG) with diode bridge rectifier.

The equation related to wind power extractions are:

$$P_{wt} = \frac{1}{2}\rho A v^3 . C_p \qquad (2)$$

$$\lambda = \frac{\omega . r}{v} \qquad (3)$$

$$\omega = \frac{1}{J}\int (T_m - T_e).dt \qquad (4)$$

where rho [kg/m^3] is the air density, A[m^2] the area of the turbine blades, v [m/s] the wind speed and C_p the performance coefficient of the rotor. The coefficient C_p is a function of the pitch angle of the blades and the tip speed ratio, J [kg.m^2] is the moment of interia, T_m [N.m] the mechanical torque and T_e the electromechanical torque from the generator[2].

The output of the wind system is connected to the PWM inverter through DC-DC boost converter whose duty cycle is determined by a perturb and observe (also called P&O) algorithm. The boost converter also increase the output voltage of wind system.

As a wind generator is a variable speed system and the output is voltage and frequency variable. For the decoupling of those state variables is done by full bridge diode rectifier. The full bridge diode rectifier is used to obtaine DC output voltage from the generator.The simulation diagram of wind turbine and wind turbine with

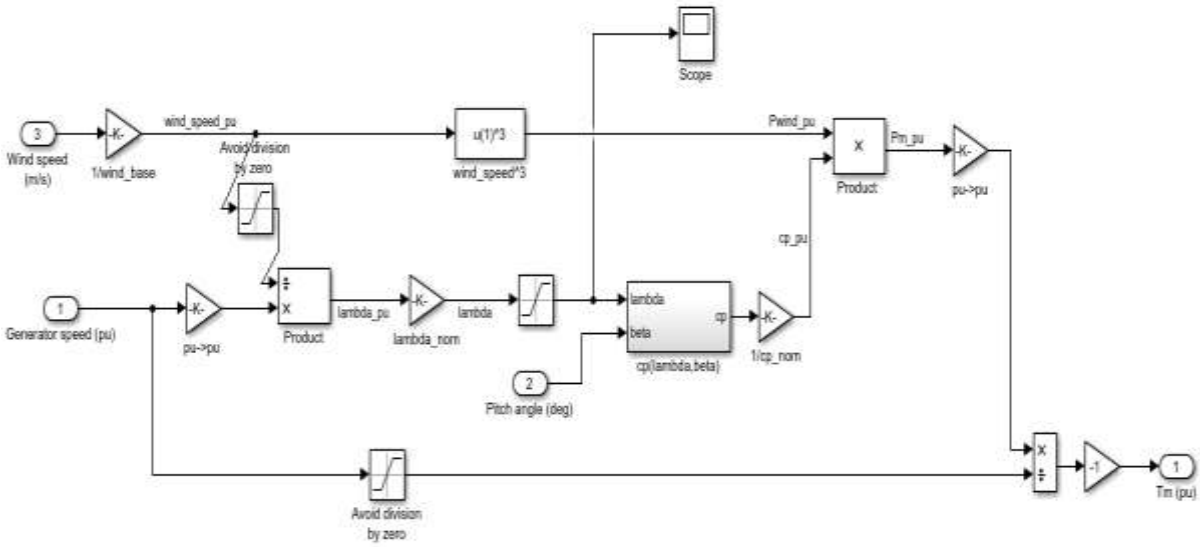

PMSG are presented in fig. 7 and fig. 8 respectively.

Fig. 7 Simulation diagram of wind turbine

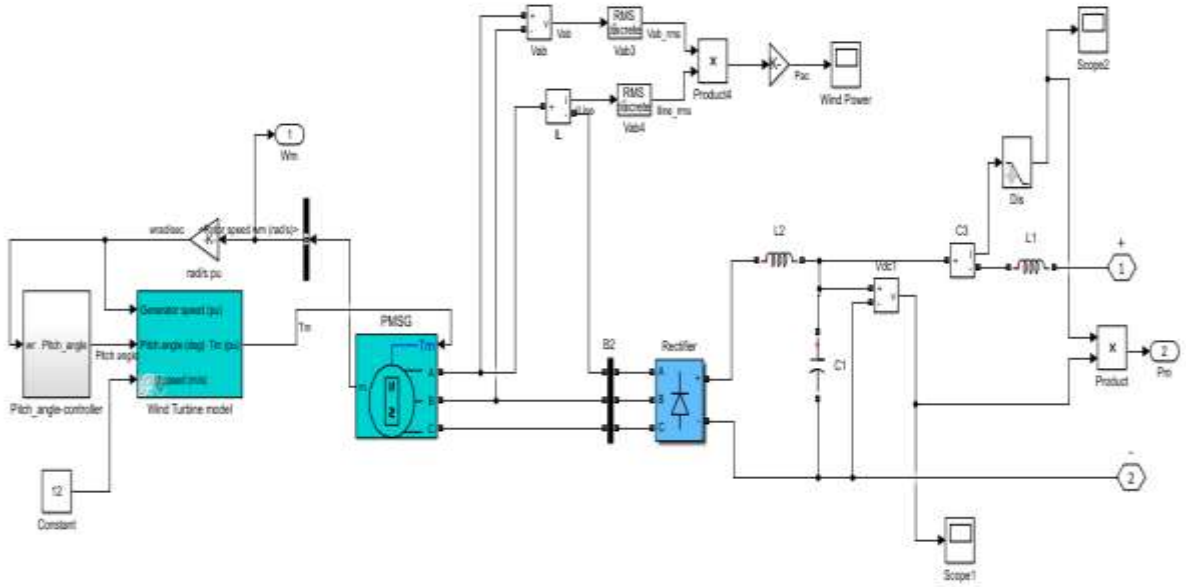

Fig. 8 Simulation diagram of wind turbine with PMSG generator and diode bridge rectifier.

The curve between output power and speed is presented in fig. 9. In this maximum power point tracking (P&O) algorithm is used.

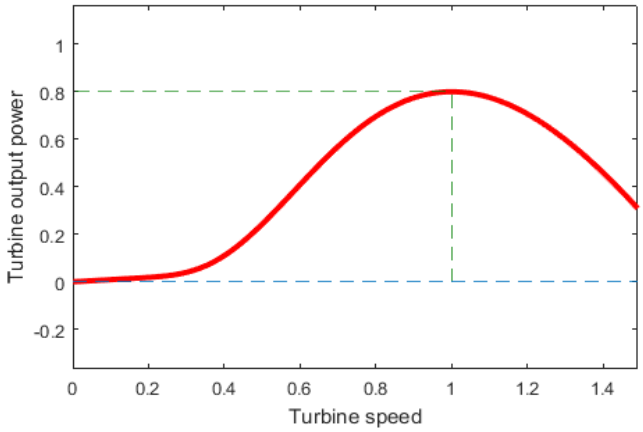

Fig. 9 Output power and speed characteristic of wind turbine

V. BOOST CONVERTER

Boost converter (also called step up converter) is used to increase the DC output voltage and decrease the output current.

Equations related to output voltage and output current are:

$$V_o = \frac{V_i}{(1-D)} \quad (5)$$

$$I_o = (1-D)I_i \quad (6)$$

where V_o is the output voltage (V), V_i is input voltage(V), I_o is the output current(A), I_i is the input current and D is duty cycle.

In this hybrid model boost converter with IGBT is used. Both PV system and wind system output voltage are increased by boost converter. The main advantage of boost converter is its output voltage is positive easy to control. The input current is continuous which is very desirable for sources like PV, wind and battery. Circuit diagram and simulation diagram as presented in fig. 10 and fig. 11 respectively.

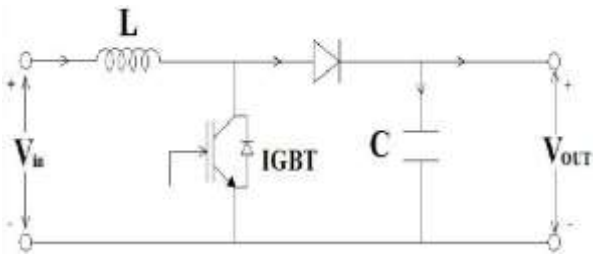

Fig. 10 Circuit diagram of Boost Converter

Boost converter (also called step up converter) is used to increase the DC output voltage and decrease the output current.Simulation diagram of boost converter with PV array is presented in fig 11. where input voltage of boost converter is the output of PV array voltage or wind turbine voltage. Boost converter step up the output voltage of PV and wind.

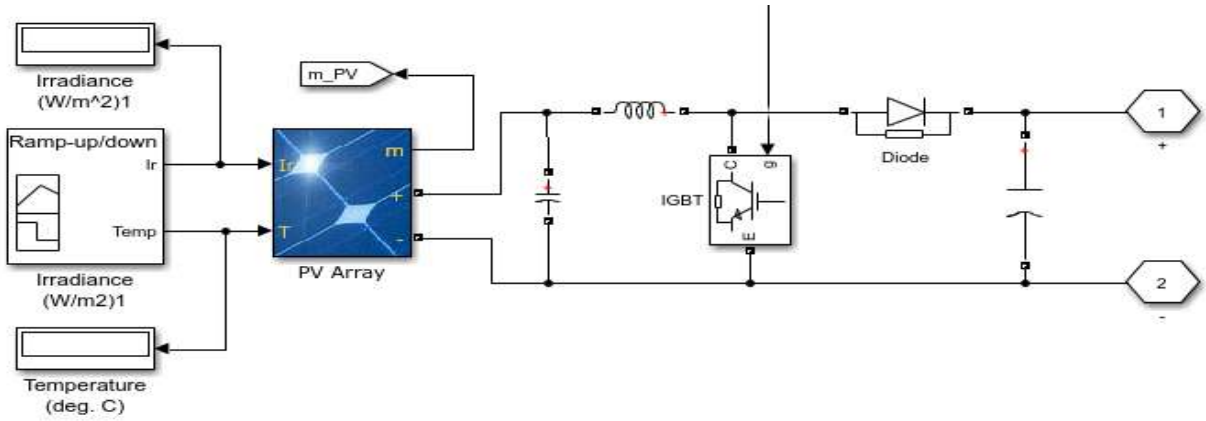

Fig. 11 Simulation diagram of boost converter

VI. PWM INVERTER

Pulse Width Modulation (also called PWM) inverter is used to give steady state output voltage irrespective to the load. In a standard inverter without the PWM technology, the output of voltage changes according to the power consumption of the load. The PWM converter corrects the output voltage according to the value of the load by changing the width of the switching frequency. The AC voltage from the inverter changes depending on the width of the switching pulse. For this effect,the PWM inverter has a controller IC which takes a part of output through a feedback loop [12].

The controller makes corrections in the pulse width of the switching pulse based on the feedback voltage. This will cancel the changes in the output voltage and the inverter will give a steady output voltage irrespective of the load characteristics. The increase in value of current before and after PWM is presented in fig. 12. The current is increase after PWM inverter. The PWM inverter's output is connected to the parallel RL and RC circuit which are further connected to the voltage measurement.

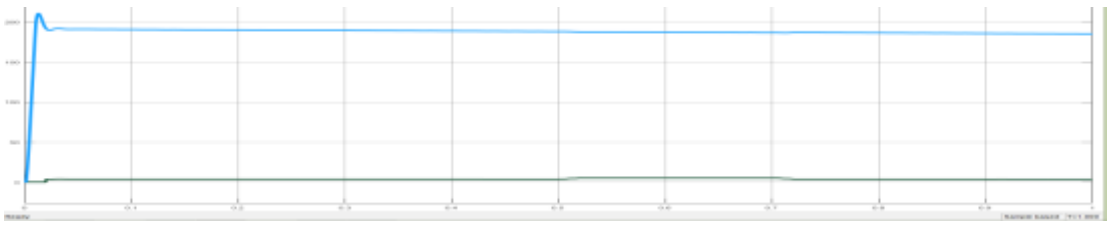

Fig. 12 Increase in value of current before and after the PWM inverter

VII. SIMULATION RESULTS

The hybrid model of Wind-PV system is shown in fig. 12. The PV system, wind system and battery all of three are connected in parallel. PWM inverter converts the DC voltage and DC current into AC voltage and AC current respectively. To reduce the harmonics, parallel RL and parallel RC circuit is used. They are connected to the PWM inverter from one side and three phase measurements from another side. Voltage measurement gives the three phase AC voltage and AC current. The simulation diagram of hybrid system is presented in fig. 13 and the output waveform of AC voltage and AC current is presented in fig. 14 and fig.15 respectively.

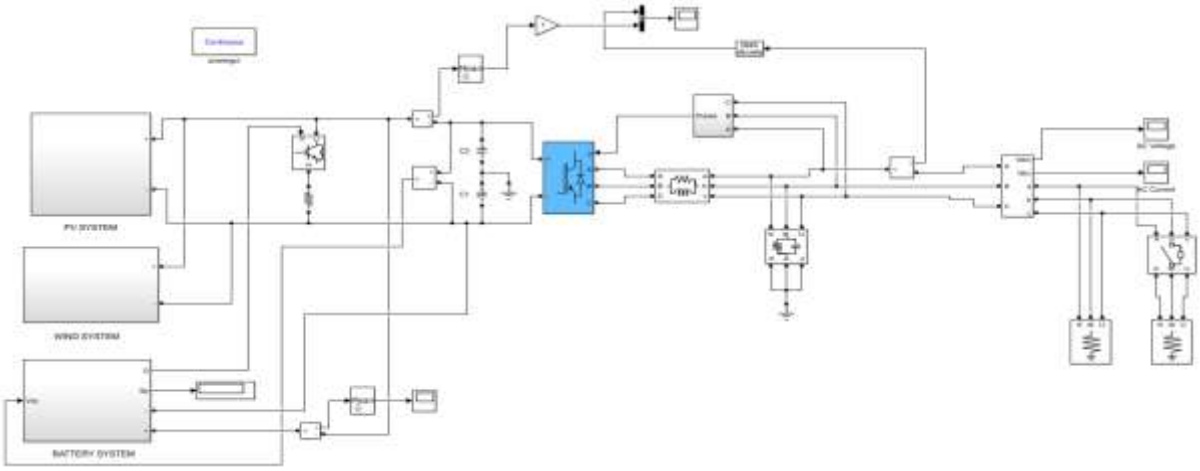

Fig. 13 Simulation diagram of hybrid system

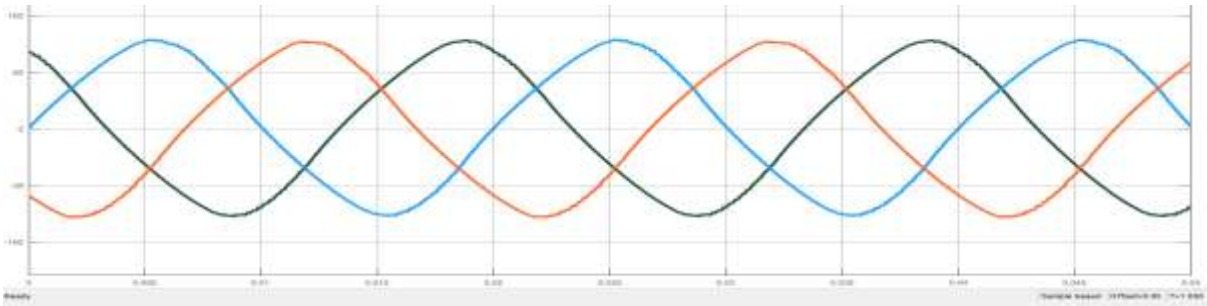

Fig. 14 Output waveform of AC voltage

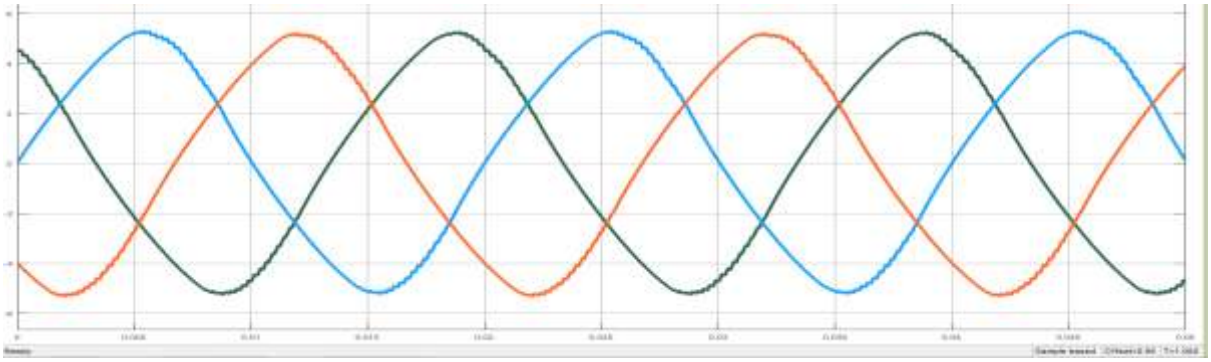

Fig. 15 Output waveform of AC current

VIII. CONCLUSION AND FUTURE SCOPE

The use of hybrid system allows a more controllable produce power. The main advantage of hybrid system is that, even in the absence of one of the renewable source the power can be delivered by the other source. The main advantage of MPPT is to increase the economic value of energy gathered by the system. The output waveform of hybrid solar and wind system is shown. Instead of, P&O algorithm incremental conductance method can be used in future. Also, DFIG is used instead of PMSG with the wind turbine model. By adding the PV cell in series and parallel in the PV module voltage and current can be increased.

REFERENCES

[1] K.C. Divya, Jacob Ostergaard,*Battery energy storage technology for power systems – An overview, Electric Power Systems Research 79*, Elsevier, 2009.

[2] Paiva, Carvalho,*An Integrated Hybrid Power System Based on Renewable Energy Sources, IECON09*, Porto, 2009.

[3] M. Ishengoma Frederick, E. Norum Lars,*Design and implementation of a digitally controlled stand-alone photovoltaic power supply*, NORPIE/2002, 2002.

[4] Yaow-Ming Chen, Chung-Sheng Cheng, Hsu-Chin Wu,*Grid Connected Hybrid PV/Wind Power Generation System with Improved DC Bus Voltage Regulation Strategy*, Applied Power Electronics Conference and Exposition, 2006.

[5] Osama Omari, Egon Ortjohann, Alaa Mohd, Danny Morton, *An online control strategy for DC coupled Hybrid Power Systems*, Power Engineering Society General Meeting, IEEE, 2007.

[6] P. Ghosh, B. Emonts, H. Janssen, J. Mergel, D. Stolten, *Ten Years of Operational Experience with a Hydrogen-Based Renewable Energy Supply System*, Solar Energy 75, Elsevier, 2003.

[7] Fernando Valenciaga, Pablo Puleston, Pedro Battaiotto, *Power Control of a Solar/Wind Generation System Without Wind Measurement: A Passivity/Sliding Mode Approach*, IEEE Transactions on Energy Conversion, Vol.18, No 4, December 2003.

[8] Lotfi Krichen, *Modelling and Control of a Hybrid Renewable Energy Production Unit, ICGST-ACSE Journal, Vol. 7, Issue 1*, 2007.

[9] Thanaa El-Shatter., Mona Eskander, Mohsen El-Hagry, *Energy Flow and Management of a Hybrid Wind/PV/Fuel Cell Generation System, Energy Conversion and Management 47*, Elsevier, 2006.

[10] Habbati Bellia, Ramdani Youcef, Moulay Fatima, *A detailed modeling of photovoltaic module using MATLAB*, NRIAG Journal of Astronomy and Geophysics.

[11] S. Masoud Barakati, Mehrdad Kazerani, J. Dwight Aplevich *Maximum Power Tracking Control for a Wind Turbine System Including a Matrix Converter*, IEEE Transaction on energy conversion, Vol. 24, No. 3, September 2009.

[12] Sankalp Verma, Hemant Kumar Verma, Md. Khwaja Mohiddin, *Modelling and Analysis of Standalone Photovoltaic System*, IJRET, November 2013.