International Conference on Latest Innovation in Engineering Science and Management
Buddha Institute of Technology, GIDA, Gorakhpur (UP)
30th - 31st March 2019 www.conferenceworld.in ISBN : 978-93-87793-80-4

DESIGN AND FABRICATION OF QUADRICYCLE

Nitesh Srivastava[1], Avinash Rai[2], Dharmesh Paswan[3], Anand Yadav[4], Amit Kumar[5], Mr Rahul Srivastava[6]

[1,2,3,4,5]Student, Department of Mechanical Engineering Buddha Institute of Technology, GIDA, Gorakhpur, U.P.
[6]Assistant professor, Department of Mechanical Engineering, Buddha Institute of Technology, GIDA, Gorakhpur, Uttar Pradesh, India

Abstract

For saving the fuel and electricity, vehicle which can be ecofriendly we design and develop human power quad cycle capable of carrying four people. It is four wheel human powered land vehicle.

The problem of energy saving is, at present, more and more important. Nowadays we are heading towards the energy crisis as depletions of fossil fuel is at very high rate, there is need of specific technology which maybe in some way to help conserve much of energy possible. This pedal cycle allows in the rear steer accommodating up to four riders, Quadricycles are a relatively new class of small fuel efficient vehicles used in rural or urban area.

This cycle can be worked on the four bar chain mechanism; it is a suitable compact model to overcome traffic and parking problems. There will be no gasoline required, zero emission, cheaper in maintain, less wear and tear, four wheel stability, provide exercise , more comfortable.

Keywords: ***four- wheel human power land vehicle, safety, zero emission, environment friendly.***

INTRODUCTION

Quad cycle is a four-wheeled human power land vehicle. To design and develop a human power quad cycle capable of carrying four people. {1}

Quadricycles are a relatively new class of small fuel-efficient vehicles it is used in rural or urban areas. It is also referred to as a quadricycle, quadcycle, pedal car or four wheeled bicycle. It is used into several purposes, including tourist rentals, pedal taxi, private touring, mountain and industrial use. It is light weight four- wheeled vehicle, and compact in design so less wear and tear and overcome traffic problems in urban mobility.{2} The speed of four-wheel human power land vehicle is up to 25 to 35 km/h. new class of vehicles, qadricycles may be seen as an ecological and flexible alternative to motorbikes or city from representing totally new class of vehicles, they can be considered a deep transformation of an historical mean of transportation accordingly to new needs and functionalities.

Quadricycle offer significantly lower levels of safety and security compared to several other kinds of vehicles that play on the same roads.{3}

Quadricycle are use to different purpose like-

- Tourist destination rental
- Social transportation
- People transportation
- Industrial uses

ENVIRONMENTAL ASPECT

Four-wheel human power land vehicle is a suitable solution for environmental pollution because it has zero emission and eco friendly therefore no any environmental pollution.{4} A new vision for transportation, including uncommon vehicles, seems to represent the compulsory strategy toward a significant reduction of greenhouse gas emission{5}. These vehicles to be use on public paths or reserved roads the argument is often put forward that these vehicles will be used instead of cars and so will reduce pollution and less traffic congestion.{6}

METHODOLOGY

Four-wheel human power land vehicle works on four bar chain mechanism. It consists four paddle which is used to ride four people together, which is less effort during ride to the vehicle, and easy to drive. Due to light in weight and compact design less wear and tear occurs, and required less maintenance and repair

\FRAME DESIGN

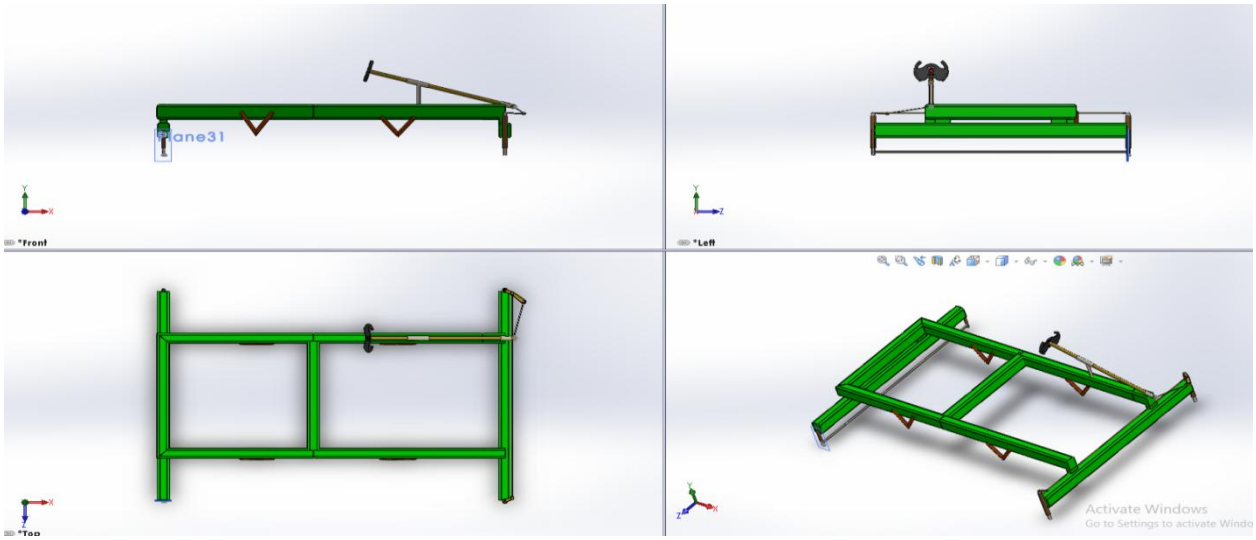

Length = 1770mm, width=1160mm

WHEEL AND RIM

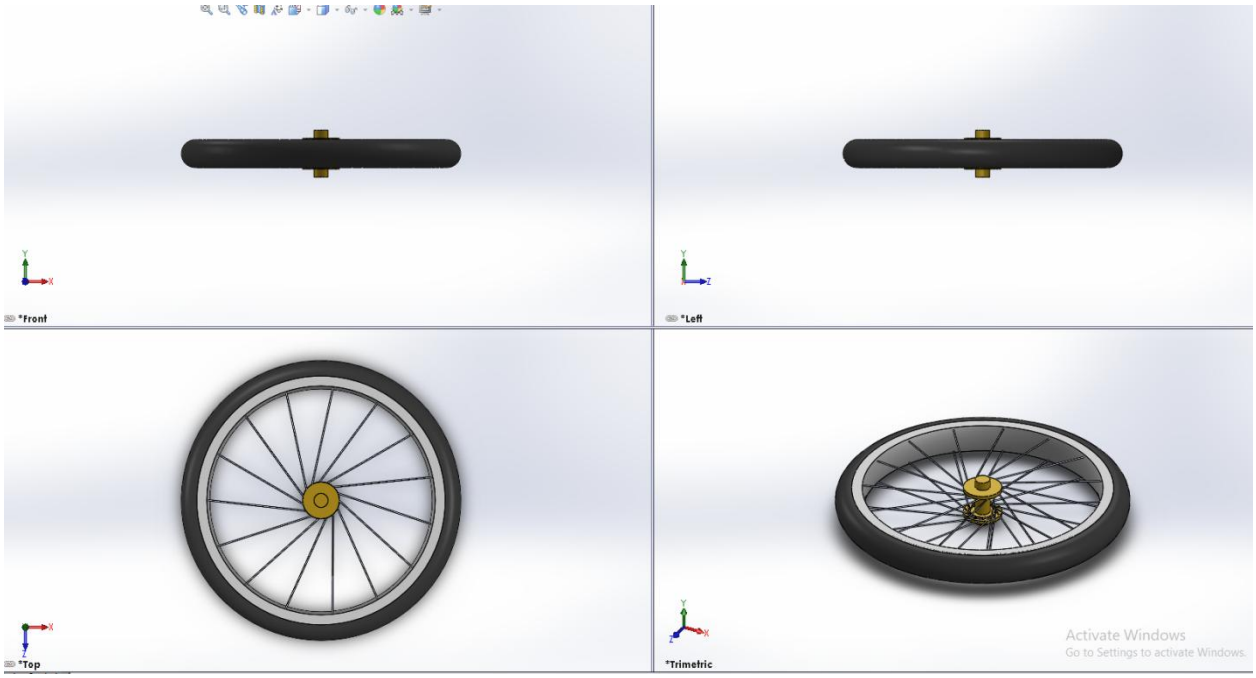

Diameter of wheel=640mm

RESULT AND DISCUSSION

As described in the concept generation, our final design is based on seat steer concept. In above figure is a solid works drawing of our final design. The basic four wheeled cycle layout is similar to a traditional foot powered recumbent cycle. Four wheeled human [power land vehicle is suitable solution for environmental pollution because it has zero emission and eco friendly there for no any

environmental pollution. There required less space, less wear and tear, four wheel stability, and provide exercise.

CALCULATION

Consider,

Total mass of man & quadracycle = 350kg

W =mg

W=350*9.81=3433.5N

FRICTIONAL FORCE

$F_f = \mu*N$

= 0.5*3433.5

= 1712.75N

F=MA

1716.75 = 350*a

a = 4.905m/s^2

Consider,

Body moves in 1second

a=dv/dt

4.905=dv/1

dv = 4.905m/s

POWER

K.E.=1/2*M*v^2

= 1/2*350*4.905^2

=4210.33KJ

Taking time = 1second

Power= 4210.33/1

P= 4.210KW

STEERIN GEAR MECHANISM:

Steering equation-

Cot ø – cot θ = c/b ----------A

ΔIBM = cot θ = BM/IM ----------1

ΔIAM = cot Ø = AM/IM

Cot Ø = (AB+BM)/IM

Cot Ø =m (AB/IM) + (BM/IM)

By equation (1)

Cot Ø = (AB/IM) + cot θ

Cot Ø – cot θ =c/b ---------- (B), (A=B)

Cot Ø – cot θ =1.16/1.177

Cot Ø – cot θ = 0.9378

Determine sprocket radius:

r_1 = 44 teeth

Pitch = 1/2
$2\pi r_1 = 44*1/2$
$r_1 = 3.501$ inch
Free wheel radius:
$r_2 = 24$ teeth
$2\pi r_2 = 24*1/2$
$r_2 = 1.9098$ inch

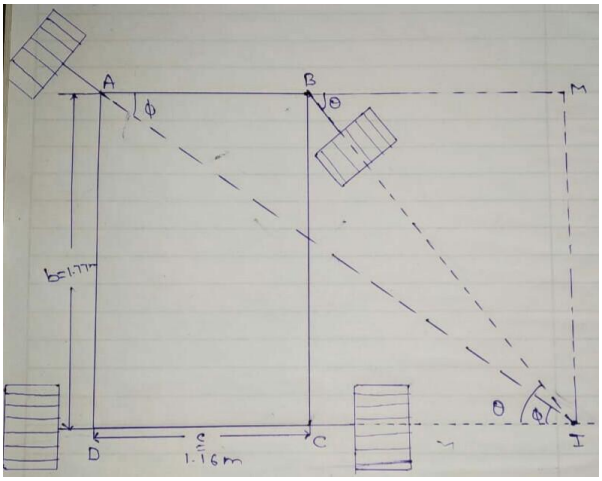

Fig- Ackerman steering gear mechanism

Driving Principle of Quad Cycle is a based on four bar chain mechanism. Four bar chain or Quadric Cyclic chain is the simplest of kinematic chains. It contains four links each forms a turning pair at A,B,C and D. According to Grashof's law:
Sum of smallest and largest link lengths < sum of the remaining two lengths
Important consideration in designing a mechanism is to ensure that the input crank makes a complete relative to other links.

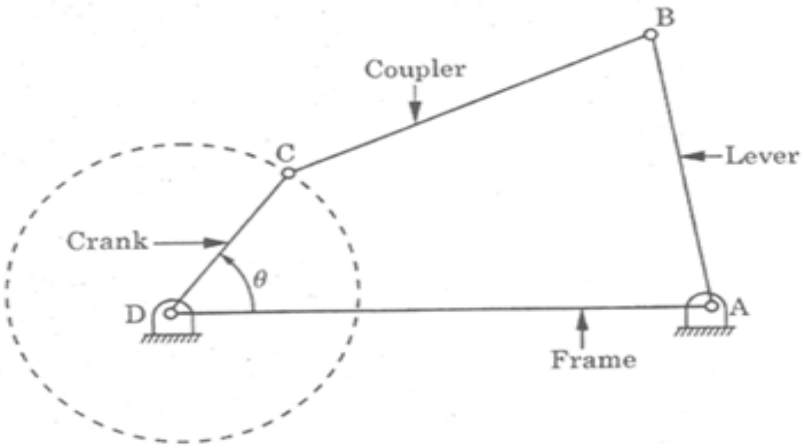

Fig (a) - four bar chain mechanism

CONCLUSION

Word people are simultaneously dealing with the air pollution, global warming and energy demand. Heavy quadricycles could represent a prominent solution, especially for small mobility used in residential area. These vehicles are considered as design for very limited operating environments. And they are currently prohibited from entry in several countries because they do not provide evidence to pass minimum safety requirements. The idea is that allowing these vehicles on roads, it will come at the expense of safety standards without a better interest for citizens. (frictional force = 1712.75N, Kinetic energy = 4210.33kJ, power = 4.210KW, Steering mechanism = Cot Ø – cot θ = 0.9378).

ACKNOWLEDGEMENT

We would like to express our regards to Prof. **Mr Rahul srivastava** for guiding us through the entire B.Tech final year project .we would also like to thank **Dr Sharique Hayat** (Head of Mechanical department, Buddha Institute of Technology GIDA Gorakhpur) for giving his valuable time to guide through the project.

REFERENCES

1. Research paper of International journal for quality research 9(4) 657-674 ISSN 1800-6450/ {1}{3}{4}{5}. Authors, Ana Pavlovic and Cristiano Fragassa.
2. Quadracycle design project 2 project guide by –prof. Nishant Sharma IDC, IIT Bombay/{2}.
3. Afgan N.H., Hovanov N., and Andre P.M.(2oo9). Sustainable management organization with example of passenger car sustainability assessment. International journal for quality research. 3(20),1-11, ISSN 1800-6450.
4. Higuchi, s. (2014). World movement on development and diffusion for next –generation vehicles. Journal of automotive safety and energy, 5(2). ISSN 1674-8484
5. http/slideplayer.com/slide/6162496/ Mechanics of machines, DR. Mohammad kilani
6. figure(a),https://www.bing.com/videos/search?q=images+on+four+bar+chain+mechanism&FORM=HDRSC3&PC=JANBA
7. Hand & Foot Powered cycle design report, Life element Design [Report]: Senior project final report/ Auth. Alwx Arsene Edwin Diego, Nathaniel Hague,Denver Schaffarzick – 2009.