International Conference on Latest Innovation in Engineering Science and Management
Buddha Institute of Technology, GIDA, Gorakhpur (UP)
30th - 31st March 2019 www.conferenceworld.in ISBN : 978-93-87793-80-4

Study of Laterite Stone as Building Material in Warm and Humid Climate of Konkan

Abhijit Bhagat[1], Dr. Parag Narkhede[2]

[1]D.Y. Patil School of Architecture, Charoli bk. via Lohegaon, Pune.

[2]Guide- Ph.D. (Architecture) Professor of M. Arch (Environmental Architecture), DYPSOA, Lohegaon Pune.

Abstract:

Due to their inherent properties, completely different building materials respond otherwise to climate. The thermal properties of building materials determine the energy consumption patterns and comfort conditions in an enclosed space. Various building materials, such as locally available stones, used for construction work which we can study to understand the properties associated with materials. To know how properties will impact performance to consider the long-term effects of using a material on the environment Building material (construction material).

Keywords: Laterite stone, AAC blocks, Thermal Comfort, Konkan Region.

1. Introduction

Over the years, the use of common construction materials is widely practiced by the humans. The use of waste and recycled materials did not become common among Engineers. Also, the use of common construction materials does not provide satisfactory and desired properties in short period of time. Laterite can be a residual ferruginous rock, usually found in tropical regions and has shut genetic association with bauxite.

The term 'laterite' was originally used for very ferruginous deposits first determined in Malabar Region of coastal Kerala and different elements of state. it's an extremely worn material, made in secondary oxides of iron, aluminium or both. It is either onerous or capable of hardening on exposure to wetness and drying. Aluminous laterites and ferruginous laterite are quite common. Laterite is found in various parts of India, where it is extensively used as building material in regions of Kerala, Goa, Karnataka and Andhra Pradesh.

2.Characteristics of laterite

Laterite occurs principally as a cap over the summits of Basaltic hills and plateaus and is the characteristic feature of tropical monsoon regions. It is best developed in the Western Ghats and its foothills. Laterite stone was used as building material in Konkan for centuries. Type of weathered material which was indurated clay,
full of cavities and pores, containing large quantity of iron in the form of red and yellow ochre. It was soft when fresh and could be cut easily and when exposed, it became hard and resisted air and water much better than bricks.

2.1 General Features of Laterite

Laterite has the peculiar property of being soft when newly quarried, but being hard and compact on exposure to the air; also, loose fragments and pebbles of rock tend to re-cement themselves into solid masses as compact as the original rock. On account of this property it is usually cut in the form of bricks for building purposes. Laterite brick is generally red in colour. It is porous and shows vermicular structure.

2.2 Physical properties of laterite:

Laterites are residual sedimentary rocks, reddish or brownish coloured, comparatively soft rocks, containing high degree of porosity and are carrying vermiform structures. The porosity is due to the in situ weathering of parent rocks. The laterite profiles show that its exposed layers are much harder than the sub surface layers. Two or three layers differing in their texture, physical properties and associations are usually found below the hard, indurated cap. Lateritic terrain may be subjected to problem like landslide and slumping. The role of ground water in such disturbances is found to be similar to that of catalytic agent. The reason for such forms of mass wasting is due to the excess accumulation of ground water in the pores of formation. The lubricating nature of the interface between permeable and impermeable beds might be causing gravity movement of overburden in the form of land sliding and consequent slumping.

2.3 Laterite profiles:

The general pattern of lateritic profile is similar at all locations, although the individual units of the profiles are not uniform. In the ascending order the parent rock passes through a zone of the partly altered bedrock, followed by a zone of lithomarge, blocky laterite and vermicular laterite. The vermicular laterite represents the uppermost zone of Laterization, which may or may not have a later formed cover of lateritic gravel and/ or a humus zone.

2.4 Hydrological properties:

Laterite, apart from its use as a promising natural resource as building material, is also regarded to act as ground water recharging source because of its physical properties particularly porosity. Laterite constitutes one of the important hydrological provinces in Konkan, as it holds roughly 55% of the total dynamic ground water storage. The laterite terrain receives heavy rainfall during every monsoon season and is getting recharged year after year. The high porosity of it enhances quick infiltration of rain water. The peculiar vesicular structure is a favourable factor in the vertical infiltration of rain water to join ground water reserve. But the lithomargic clay occurring in between lateritic cap and underlying weathered bedrocks has a low permeability and prevents easy downward movement. This may facilitate retention of water in the pores of laterite for a long period. The ground water condition of laterite is always in a dynamic state due to fluctuations of water table.

2.6 Laterite genesis

Though many hypotheses have been advanced by different geologists, the origin of the laterite is as yet a much debated question. One source of difficulty lies in the chemical and segregates changes which are constantly going on in the rock and which obliterate the previously acquired structures and produce a fresh arrangement of the constituents of the rock.

It is probable that laterites of all the different places have not had one common origin and that widely divergent views are possible for the origins of the different varieties. Use of Laterite as building material.

Laterite stone have traditionally used after directly extraction from the naturally occurring soil sources, once which they are cut into bricklike shapes for use as walling units. Recently, there has been advancement in victimization laterite within the type of interlocking bricks accustomed construct walls without the utilization of cement mortar. They are manufactured in two widths of 6 inches and 8 inches; and are also available in varying lengths. Each interlocking brick has grooves and locks on its sides which can be fitted with each other to make a block wall that does not need cement mortar for bonding. They have lower embodied energy due to use of natural locally available materials- stone and wood. The only energy spent is in transportation of materials. The high recyclability factor – especially in case of interlocking blocks which don't use connecting mortar is a bonus.

3. Konkan Region:

Konkan is a coastal strip occupies the entire west coast of Maharashtra. It is to the heart of this serene landscape. The land of Konkan is bounded by the Sahyadri Mountain range ("Western Ghats") on the East and the Arabian Sea on the West. The region consists of costal districts such as Raigad, Ratnagiri, Sindhudurg and Thane.

The 'Konkan' is the narrow strip of the coastal land situated between Arabian Sea and Western Ghats escarpment. The famous Western Ghats is lying in the 'Konkan'. 'Damanganga' River separating Maharashtra and Gujrat States forms the northern limit of 'Konkan'. In the south it extends.

3.1 Features of study area:

Konkan region is a coastal belt of Maharashtra state. It has 42 per cent of State 's available water resources, only on 10 per cent geographical area having 8 per cent of cultivable area and supports 25 per cent population of the State (Anonymous, 2013). The Konkan region receives rainfall from 2500 to 4500 mm annually during monsoon i.e. (June to September).

Konkan Region is one of six administrative divisions of Maharashtra State in India. Konkan is the west division in the state, with an administrative headquarters in the city of Mumbai and it is also state capital as well as finical capital of India. The seven districts i.e. Mumbai City, Mumbai Suburban, Raigad(Alibag), Ratnagiri, Sindhudurg, Thane and Palghar (1stAugust 2014) is included in the Konkan Region shown in Figure 1. Total area is 36,740 square km, total population 28,739,397and literacy 98.88 percent.

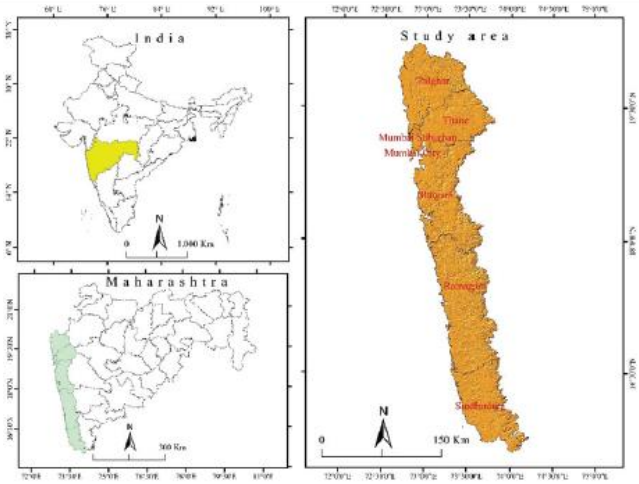

Fig 1 Regional Map

4. The climate of warm-humid

The climate of warm-humid zones is characterized by high rainfall and high humidity. The temperature range is relatively high at around 30 - 35°C and is fairly even during the day and throughout the year. Due to minimal temperature differences, winds are light or even non-existent for longer periods. However, heavy precipitation and storms occur frequently.

In general, in tropical and subtropical regions the daytime temperature is uncomfortably high, particularly during the warmer seasons and in low altitude locations. However, the differences between regions are immense, depending mainly on the distance from the equator and on altitude.

Air humidity is also of great importance. This factor influences the precipitation pattern and the amount of solar radiation that reaches the earth's surface. The influence of a cloud cover is most obvious, but invisible humidity in the atmosphere also alters the amount of radiation. Whereas with dry air conditions the radiation is strong and direct, humid air results in a less intense but diffuse radiation and also reduces the amount of re-radiation to the night sky. These factors result in mean temperatures that differ highly from place to place. Annual and diurnal fluctuations also vary sharply.

5. Case study of Konkani house

The Konkani houses built from these red bricks of laterite are very suitable for living in Konkan's humid atmosphere. These bricks are used in constructing the Pakhadi or the steps made in the highlands of Konkan, the rock compounds built around the coconut gardens, temples, houses and the pathways. The grass blooming on these Lateritic brick mines during the rainy season looks really beautiful. It is also an unforgettable experience to see colourful flowers blooming on the laterite plateaus in the monsoon. Due to the huge demand of bricks made from laterite in Konkan and the outside areas, the laterite mining industry is developing in Ratnagiri district. The process of cutting these bricks from the

 ISBN : 978-93-87793-80-4

underground mines with minimum use of machines is taking place here since many years.

Fig 3 Side Elevation **Fig 4 Roofing Detail**

Fig 5 View from Road Fig 6 Side View 5.1 Software simulation of case study house

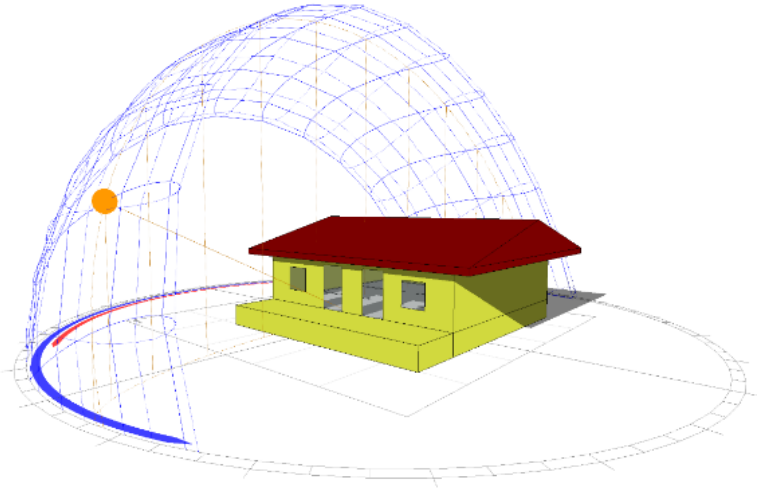

Fig 7 Shadow Analysis (Ecotect) 2011

5.2 Solar Radiation in March (Ecotect 2011)

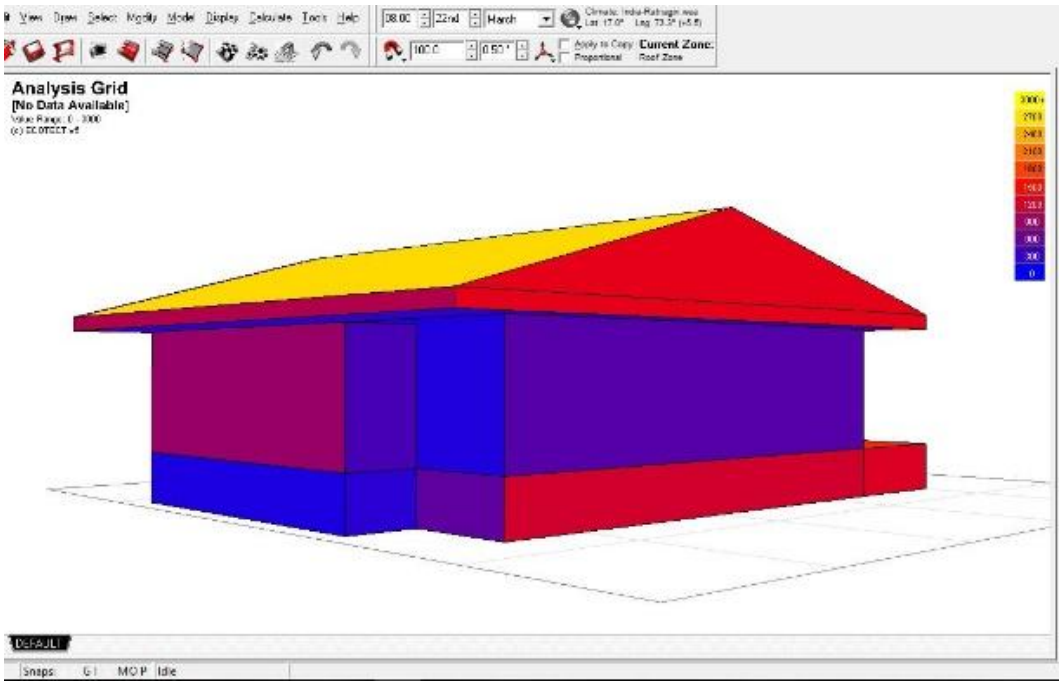

Fig 8

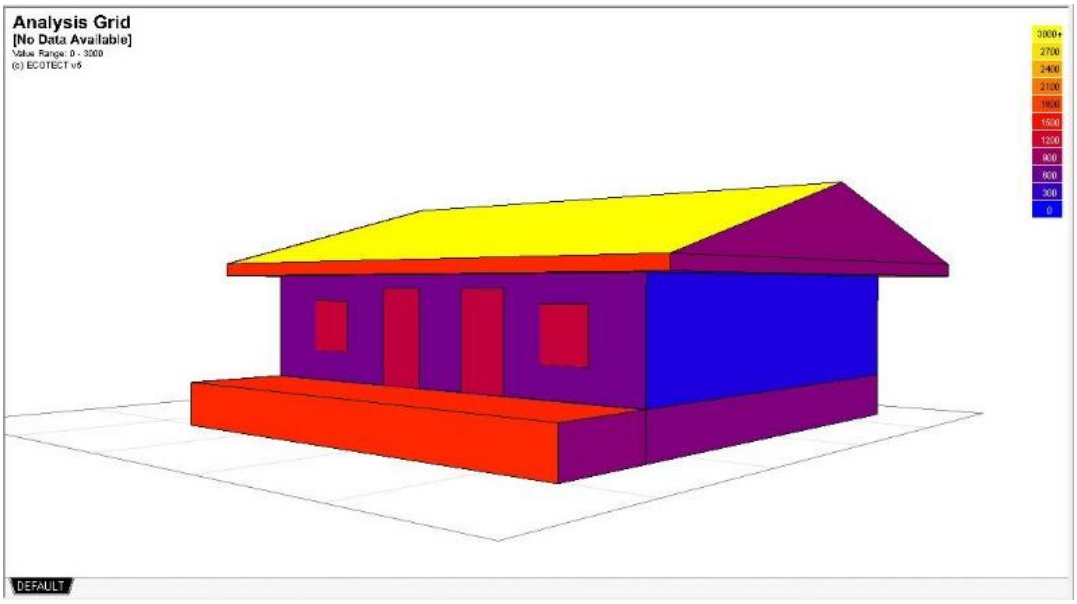

Fig 9

5.3 Shadow analysis

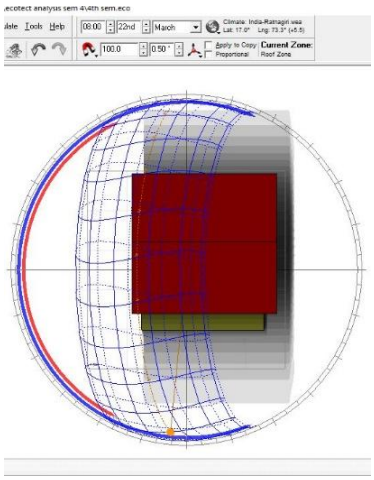

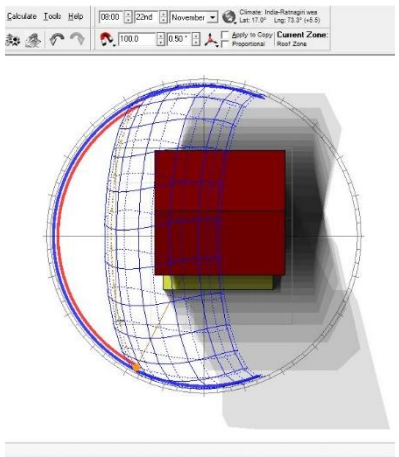

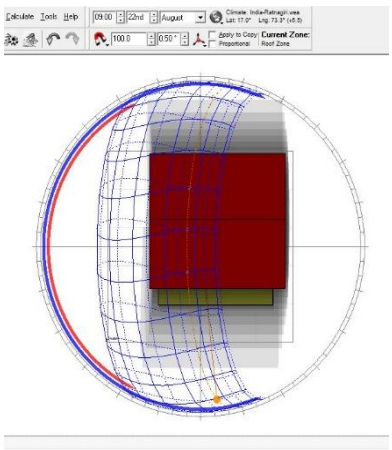

March
Fig 10

November
Fig 11

August
Fig 12

6.Conclusions

The results from the case study confirm what is already known about the need and the importance of climatic building designs. The main is to provide buildings that fulfils the human requirements for adequate and affordable housing with comfortable living conditions that is energy efficient. The lack of proper architectural designs of buildings in warm and humid climates can be attributed to the fact that architecture and the building designs in developing countries follows international trends or the architectures of temperate countries without any climatic considerations. This has resulted where architectures in developing countries rely entirely on fix the indoor climates. This can be done, but at high annual costs for energy and maintenance. Generally, in developing countries buildings are set up rather quickly due to lack of proper assessment on building sites. This results in building with orientations that contradict the prevailing climatic conditions with regards to solar radiations and wind.

According to the simulations, buildings in warm and humid climates have the potentials of obtaining and meeting the human requirements for adequate indoor climate given the buildings are properly designed according to the prevailing climatic conditions. If the buildings are properly designed and the climate conditions is met according to the simulations. There some parameters that need to be compromised in cases where is these parameters maybe contradictory to one another such as solar radiation and wind directions. The result on this study confirms what previous studies on the subject have concluded on the extent of building designs in equatorial tropical climates.

Results from this study validates the previous study done on the subject regarding climatic building designs but also

provides additional information on the extent of material responsiveness in warm and humid climates, particularly in Konkan region of Maharashtra.

7. References:

Journal Papers

[1] https://igbc.in/igbc/html_pdfs/technical/Building%20Insulation.pdf

[2] http://fac.ksu.edu.sa/sites/default/files/uvalues_definition_and_calculation.pdf

[3] http://shodhganga.inflibnet.ac.in/bitstream/10603/130340/6/06_chapter%201.pdf

[4] https://ratnagiritourism.in/en/industries/laterite-quarry/

[5] https://www.academia.edu/3557744/Kerala_Architecture_- _A_Case_study? auto=download

[6] http://www.pravinbuildtech.com/costanalysis.html

[7] http://www.biltechindia.com/biltech-ace-aac-benefits-advantages.asp?links=b3

[8] http://www.nzdl.org/gsdlmod?e=d-00000-00---off-0envl--00-0----0-10-0---0---0direct-10---4-------0-1l--11-en-50---

[9] https://www.getty.edu/conservation/our_projects/science/climate/paper_toledo.pdf

[10] http://www.hdm.lth.se/fileadmin/hdm/Education/Undergrad/ABAN06_2015/Climatic_building_design_in_warm_humid_areas_-__Alexina_de_Roux.pdf

[11] http://konkantribune.blogspot.com/p/about-konkan.html

[12] Climate responsive building design in warm and humid climates Analysis of passive Design and the impact on indoor thermal comfort in Dares Salaam, Tanzania.

[13] Traditional Housing Features in Development of Rural Built Form: A Spital Narrative On Typical Konkani House: Case of Murud, Dapoli District, Maharashtra, India Dr.AvantiBambawale, Professor Sinhgad Technical Education Society's Sinhgad College of Architecture, Vadgaon Bk. Pune.

[14] Building Energy Conservation and Green Architecture Chaya ChavanTirvir, PadmashreeDr.D.Y. Patil College of Architecture, Akurdi, Pune

[15] https://nptel.ac.in/courses/112105129/pdf/R&AC%20Lecture%2029.pdf

[16] Thermo physical characteristics of economical building materials by P. Meukama, Y.Jannotb, A. Noumowec, T.C. Kofaned

[17] Study of Laterite Stone as Building Material by NishaMaklur, Dr. Parag Narkhede

[18] Vernacular Mud Construction Techniques of Vidarbha Region -A Sustainable Approach bySeema M Burele and SheebaValssonn

[19]https://ratnagiritourism.in/en/industries/laterite-quarry