International Conference on Latest Innovation in Engineering Science and Management
Buddha Institute of Technology, GIDA, Gorakhpur (UP)
30th - 31st March 2019 www.conferenceworld.in ISBN : 978-93-87793-80-4

Fabrication of Sand Sieving Machine

Ranjit Sharma[1*], Ankit Singh[1], Saurabh Singh[1], Sharvan Shukla[1], Ass.prof. Sharique Hayat[2]

[1]Department of Mechanical Engineering
Buddha Institute of Technology, Gida, Gorakhpur, Uttar Pradesh, India
[2]HOD of Mechanical Engineering
Buddha Institute of Technology Gorakhpur, Uttar Pradesh, India

ABSTRACT

Construction of buildings requires sand as an important ingredient Sand is used at different stages in construction right from the foundation to the finishing work i.e. plaster. The sand sieving machine is a machine that is used for the sorting/screening/separation of sand. The machine works on the principle of reciprocation motion and fro motion is responsible for the agitation (Shaking) of the sand leading to separation of coarse particles from the required particles (fine and clean sand).The machine fabricated for building constructions to screen and that will be used as aggregate for plastering and concrete work where the quality of sand increases the quality and finishing of the work.

Sand is used in construction, manufacturing and many industries. Sand needs to be filtered and separated from unneeded particles, stones and other large particles before it is put to use.0ur system puts forward a fully automated sand filtering and separator system that automatically filters sand poured on it. Here we use a motorized shaft that is mounted horizontally using mounts. The shaft is connected to a filter frame with mesh below and enclosing frame on the sides. We now have a rod connected from the shaft to the filter frame in a way such as to achieve best horizontal motion at the same time. ON Switching on the motor using our motor controller circuit, the system allows to operate the motor. This allows us to operate the sand filter motion for appropriate sand filtering needs.

A sieve is a device for separating wanted elements from unwanted material or for characterizing the particle size distribution of a sample, typically using woven screen such as a mesh or net. This project focuses in design, fabrication of the mechanical part of machine and the system of the sieve machine body structure and mechanical system needs to concern some other criteria such as strength, safety and ergonomic design.

Key Words: Sand mesh, a.c. motor, V-belt pulley, connecting rod.

INTRODUCTION

A sand sieving machine is designed to separate the particle according to their mesh size. In many industries for example the pharmaceutical, mining, food, etc. it is often desirable to communicate particulate matter. Sieves are used for sifting flour has very small holes. Depending upon the types of particles to be separated, sieves with different types of holes are used. Sieves are also used to separate

 ISBN : 978-93-87793-80-4

stones from the stand. A number used to designate the size of a sieve, usually the approximate number of openings per inch. The size of openings between crosses wires of a testing sieve.

The sand sieving machine is handily to construct and can be operated easily. This fabricated with the help of parts like a handle, crank and slotted link mechanism, bearing, rail track, sieving box and a collecting box.

The horizontal sieving machine is worked by eccentric pendulum mechanism. The rail track is attached to the base in which the collecting box moves in it. The collecting box is fixed with the shaft to move when the shaft is reciprocated. The sieving box is placed inside the collecting box, and the machine is started. When the collecting box moves in the reciprocating motion, the sieving process is performed.

The various size of coal, coffee powder, sand are separated by eccentric pendulum operated two-level screening machine. The component which is greater in size they stay on the top layer of vibrating screen. The little components fall on the second screen and lesser size of components obtained in the tray. Thus the different sizes of components are separated with the help of screens.

METHODOLOGY

Power Supply

↓

Motor

↓

V-Belt

↓

Cam plate attached with connecting rod

↓

Reciprocating motion

↓

Sand Sieves

WORKING PRINCIPLE

The sand sieving machine is very easy to construct and can be operated easily. It is very economic among this kind of mechines.This project is fabricated with the help of parts like a V-Belt,pulley,cam plate, sand siever.Sand sieving machine works on the principle of reciprocation motion is responsible for sand leading to separation of stone particles from the required fine and clean particles. When the A.C. supply is switch ON the motors starts to rotate with the required rpm.The V-Belt pulley connected on the motor shaft power transmission one shaft to the another shaft. Connecting rod attached with cam plate and sand sieve or mesh. Cam provide sand sieve rotary motion into reciprocation motion, then sand put on the sand sieve and reciprocate and sand clean particles collect on the container (sand collecting box) and according to need its used it.

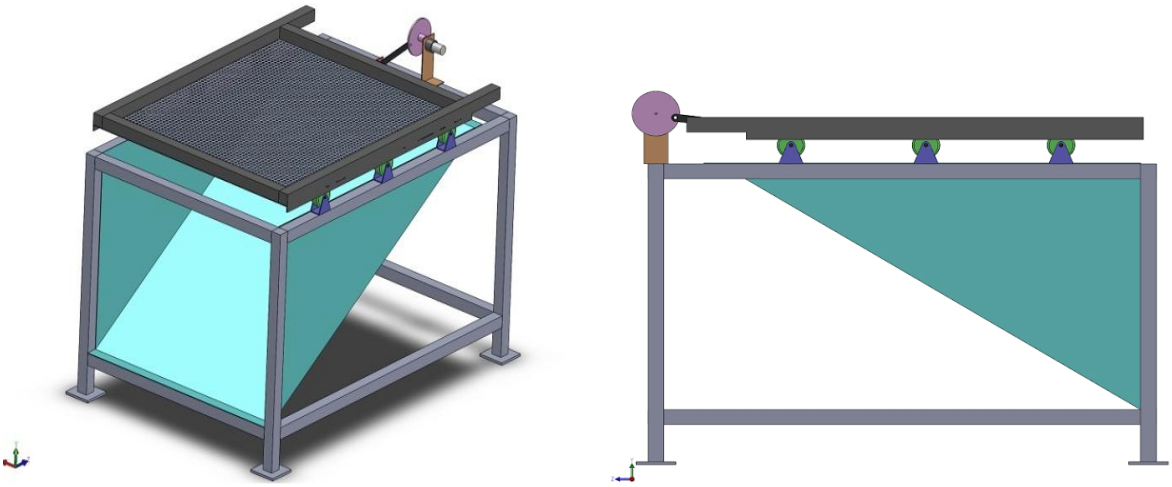

(a) **(b)**

Fig 1 (a) and (b) 3D and 2D view of sand sieving machine.

MAIN COMPONENT USED

A.C. MOTOR The electric motor converts electrical energy into mechanical energy.
Output power = 1 H.P., 220V-240V, 50 Hz, Speed = 1440 RPM
Simple structure, easy to control.
Induction current is generated on the cage according to the rotating magnetic field, so the rotor will be driven accordingly without detecting rotor position

Fig. 2 A.C Motor

SAND SIEVING MESH

>Mesh is a measurement of particle size often used in determining and thus the particles that can pass through these openings.

>**Sand screen: Rectangular mesh:** 1100*800*3 mm

>Sand particle 0.063 mm

>Mesh No. 4

>Sieve number mesh number means the number of holes which are present in 1 inch of any specific sized sieve when measured in any particular direction.

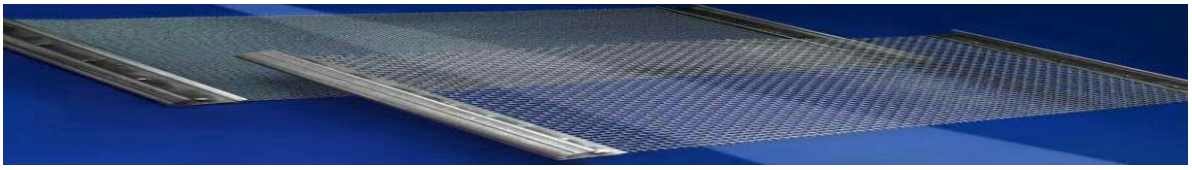

Fig 3 Sand Sieving Mesh

V-BELT PULLEY

>V-belt drive is mostly used in factories and workshops where a great amount of power is to be transmitted from one pulley to another when the two pulleys are very near to each other.The V-belts are made of fabric and rubber and pulley made cast iron materials.

Fig. 4 V-Belt Pulley

CAM PLATE

Cams are used to convert rotary motion into reciprocating motion.

BEARING

60NLH

LIFE OF BEARING = ————

10^ (6)

From shaft diameter designation of CP204 bearing is selected from standard design data book.

204: Indicate Bore diameter of bearing.

Code	Diameter
00	10 mm
01	12 mm
02	15 mm
03	17 mm
04	20 mm

.

So, 4*5=2So internal diameter is 20 mm.

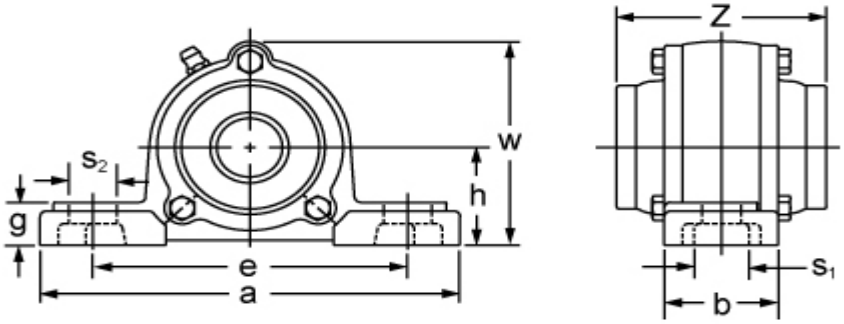

Fig.4 BALL BEARING DIMENSION

Specification :

Shaft Diameter	20 mm
Bolt size	M10
Bearing	UC204
Housing	CP204
Lubrication fitting tap	¼-28UNF

Dimensions:-

h	33.3mm
a	127mm
e-min	86mm
e-max	105mm
b	38mm
S1	13mm
S2	19mm
g	15mm
w	69mm
z	62mm

ADVANTAGES

[1] Easy disposes off unnecessary object.
[2] Simple construction and easy to used
[3] Automatic as well as fast filtering.
[4] It is compact size and less weight.
[5] The machine is easy to operate and anyone with a little knowledge also can operate it.

APPLICATION

[1] It is used in construction work.
[2] It is used in Foundry industry, concrete work and fire clay bricks.

[3] It is used in mining area, electric pole factory, building site, concrete dam site.
[4] Metals power, coal power, zinc power, sugar powder milk power filter.

CONCLUSION

[1] Improve the quality of sand.
[2] To reduce human effort.
[3] To increase the efficiency of worker.
[4] To save the time and money.
[5] It can be better useful for small industry.
[6] Floor area required is reduced.

ACKNOWLEGMENT

This work would not have been possible without the support of the **Mr. Sharique Hayat, H.O.D.** of the department of Mechanical Engineering, Buddha Institute of technology, Gida, Gorakhpur as my teacher and guide; he has taught me more than I could ever give him credit for here.
I am grateful to all those whom I had the pleasure to work during this and other related projects.Each of members of my group and the entire faculty member has provided me extensive personal and professional guidance and taught me great deal about both scientific research and life and general.

REFERENCE

[1] OLADEJI AKANNI OGUNWOLE OF “Construction and testing of a dry sand sieving machine design,’’
[2] Joseph E.Shigley, Mechanical engineering desigen.
[3] A.K. Nachimuthu 2013”Minimization of surface roughness in cnc turning using Taguchi Method,” IOSR Journal of mechanical and civil engineering.
[4] Chipil, W.S. and Basal, F. (2014) A rotary sieve method for determining the size distribution of soil particles, soil sci. 56, 95-100
[5] ALLEN T., 2003, particle size analysis by sieving, Powder sampling and particle size determination, Elsevier chap. 4, 208-250