International Conference on Latest Innovation in Engineering Science and Management
Buddha Institute of Technology, GIDA, Gorakhpur (UP)
30th - 31st March 2019 www.conferenceworld.in ISBN : 978-93-87793-80-4

WI-FI BASED PATIENT HEALTH CARE MONITORING SYSTEM

Manish Kumar Yadav[1], Dheeraj Singh[2], Mohd Numan[3], Dhananjay Tripathi[4], Narendra Kumar Chaurasia[5], Mahesh Kumar Singh[6]

1, 2, 3, 4(E&C Deptt., BIT, GIDA, Gorakhpur, India)

5, 6(Asst. Prof., E&C Deptt., BIT, GIDA, Gorakhpur, India)

ABSTRACT

In this paper, the present systems allow constant monitoring and require the sensors to be placed in such a way that it limits the patient to his bed. This paper focuses on creating a Health monitoring System using sensors and can help people by providing healthcare services such as medical monitoring and medical data access. The system would benefit the patient as the patient will no longer be confined to the hospital bed as the sensors are wearable nor any assistant doctor or nurse will be required to log the health vitals of the patient manually thus reducing any possible human error. The goal of such systems is to provide early warning of physiological deterioration such that preventative clinical action may be taken to improve patient outcomes. There are many advantages of using different type of sensor. It can be used for broader range of patients and medical professionals and those people living in rural or isolated regions.

Keywords---Arduino, Temperature Sensor, Heartbeat Sensor, Wi-Fi Module, Physiological Deterioration

I. INTRODUCTION:

The technical brilliance and development in different fields has led to a drastic in our lives, one among them is embedded systems. The application of these devices is to monitor the patient health status. WI-Fi is a wireless connection network that is used to connect different devices at a frequency of 2.4GHz.[6]. For medical applications also this WI-Fi is widely used. The WI-Fi can communicate with the devices of about 25m. The other network is GSM network. This can be operated from any distance to any point of control. The communication is done with the help of local network support. This can get communicated to any part of the world which the network of the local system is applicable. Here we are using for the hospital communication for monitoring the patient. [4]

II. PROBLEM STATEMENT:

In early decades the situation was like large numbers of patients and limited availability of doctors ,large size medical instruments in special care units like ICU'S so that one nurse or doctor is essential to attend each patient in different wards.[5]. So the patient could not be continuously monitored so following problem formulation is evolved as follows:-

- The traditional medical test instruments in large sizes.

- Patient couldn't be found in time & helped in time.
- Time consuming patient monitoring
- Human attention is required for each patient.
- Limited availability of medical instruments.
- Continuous monitoring was not possible.

III. SYSTEM ARCHITECTURE:

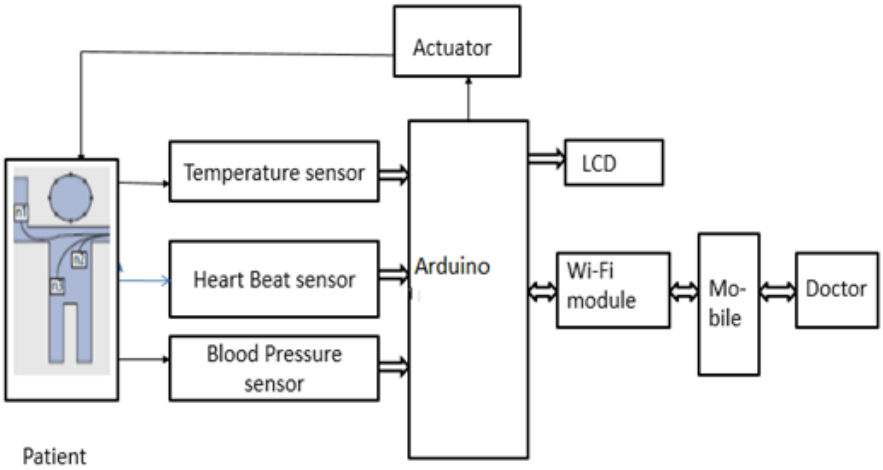

Fig.1. System Architecture

Fig.1. shows the complete system architecture for monitoring the health system

IV. METHODOLOGY:

The objective of this study is to design and implement a wireless physiological monitoring system for monitoring vital signs remotely to promote the mobility of both the patients and the medical personnel as shown in Fig.2. [1]

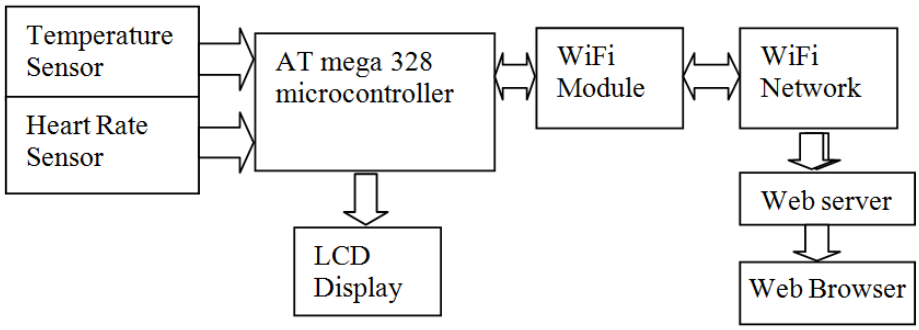

Fig.2. Block Diagram of wireless physiological monitoring system

V. ARDUINO:

Arduino Uno is a microcontroller board based on the ATmega328P (datasheet). It has 14 digital input/output pins (of which 6 can be used as PWM outputs), 6 analog inputs, a 16 MHz quartz crystal, a USB connection, a power jack, an ICSP header and a reset button (Fig.3). It contains everything needed to support the

microcontroller; simply connect it to a computer with a USB cable or power it with a AC-to-DC adapter or battery to get started.

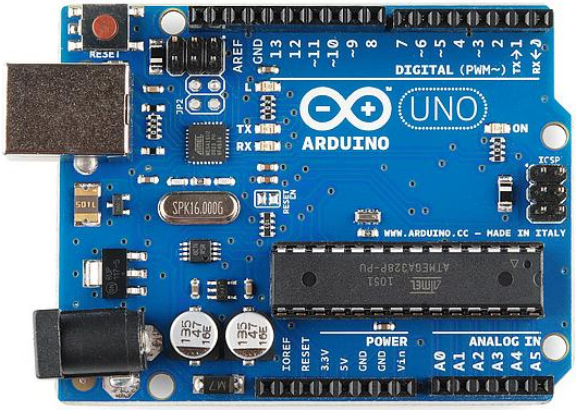

Fig.3. Arduino UNO

VI. TEMPERATURE SENSOR:

The LM35 is one of the most precision IC temperature sensor as shown in Fig.4. The LM35 series are precision integrated-circuit temperature sensors, whose output voltage is linearly proportional to the Celsius (Centigrade) temperature. The range of operating temperature is from - 55°C to 150°C. [3]

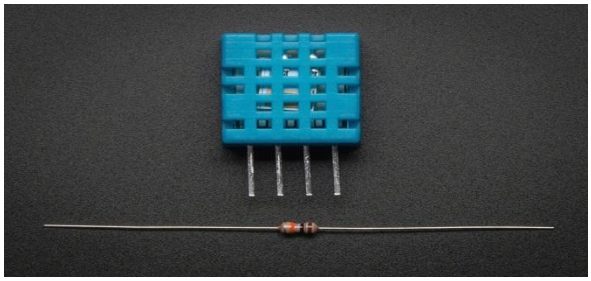

Fig.4. LM35

VII. HEART BEAT SENSOR:

Heart beat sensor is designed to give digital output of heat beat when a finger is placed on it (Fig.5). When the heart beat detector is working, the beat LED flashes in unison with each heart beat. This digital output can be connected to microcontroller directly to measure the Beats Per Minute (BPM) rate. [3]

Fig.5. Heart beat sensor

 ISBN : 978-93-87793-80-4

VIII. WI-FI MODULE:

The following Fig.6 shows the Wi-Fi Module is a self contained SOC with integrated TCP/IP protocol stack that can give any microcontroller access to your Wi-Fi network. [2]. Wi-fi module comes pre-programmed with an AT command set firmware, meaning, you can simply hook this up to your Arduino device and get about as much Wi-Fi ability as a Wi-Fi Shield offers.

Fig.6. Wi-Fi Module

IX. LIQUID CRYSTAL DISPLAY:

A liquid-crystal display is an electronic visual display, even panel display, or video display that utilizes the light adapting properties of liquid crystals (Fig.7).

Fig.7. LCD Display

X. HARDWARE REQUIREMENTS:

- Heart rate sensor
- Temperature sensor
- Atmega 328 microcontroller - Arduino
- Wi-Fi module
- LCD Display

XI. BENEFITS:

- Continuous monitoring: It can be used in hospitals on operated patients for monitoring their vital parameters.
- Record Keeping: This system contains GUI which maintains the history of patients.
- Increased Efficiency: The number of nurses required for keeping a check on patients can be reduced to large extent.
- More accurate: Chance of human error in checking health parameters are also reduced.

XII. APPLICATIONS:

- The staying of specialist is eliminated.

- It is multipurpose so that overall conditions are easily measured.
- Easy to operate.
- Compare with compact sensors it gives better performance.
- Easy and reliable for doctors.
- Increases efficiency.

XIII. CONCLUSION:

This paper described a personalized health monitoring application using a smart phone and wireless (wearable) sensors. We are able to detect life threatening arrhythmias locally on the smart phone and, if the patient is in danger, we can contact an ambulance automatically. In normal situations, our system monitors and records the sensor data for inclusion in the patient health record which is used for further analysis by a specialist. Our system is designed with personalisation in mind. The heart specialist can select one or more sensors to be used for a particular patient and configure the corresponding threshold levels for that patient. Our application generates alarms or warnings when thresholds have been reached.

We believe that our system is a step towards promoting patient's autonomy and by providing personalized monitoring and advice we hope that it will give the patients more confidence and improve their quality of life.

REFERENCES:

[1]. Yang Hao and Robert Foster, "Wireless body sensor networks for health-monitoring applications", Physiological Measurement, vol. 29, no. 11, November 2008.

[2]. Mrs. Sonal Chakole, Ruchita R.Jibhkate, AnjuV.Choudhri, ShrutikaR.Gawali, Pragati R.Tule, "A Healthcare Monitoring System Using Wi-Fi Module", vol.4, March 2017.

[3]. N. Sivasankari, M. Parameswari and K. Anbarasan, "Health Monitoring and Control System Using Wireless Sensor Network", Middle-East Journal of Scientific Research 24 (Techniques and Algorithms in Emerging Technologies): 59-64, 2016 ISSN 1990-9233; © IDOSI Publications, 2016.

[4]. N. Sivasankari& M. Parameswari, "Wi-Fi Based Health Monitoring And Control System", International Journal of Multidisciplinary Research and Modern Education (IJMRME) ISSN (Online): 2454 - 6119 (www.rdmodernresearch.org) Volume I, Issue II, 2015.

[5]. Valerie Gay, Peter Leijdekkers, "A Health Monitoring System Using Smart Phones and Wearable Sensors", International Journal of ARM, VOL. 8, NO. 2, June 2007.

[6]. Khalifa AlSharqi, Abdelrahim Abdelbari, Ali Abou-Elnour, and Mohammed Tarique, "Zigbee Based Wearable Remote Healthcare Monitoring System For Elderly Patients", International Journal of Wireless & Mobile Networks (IJWMN) Vol. 6, No. 3, June 2014 DOI : 10.5121/ijwmn.2014.6304 53.