2nd National Conference on Recent Innovation in Engineering, Science, Humanities and Management
REVA University, Yelahanka, Bangalore, (India)
29th-30th March 2019 www.conferenceworld.in ISBN : 978-93-87793-79-8

Automation with 'REDTACTON' Technology

Vishwas P[1], Rachana A[1], Vishwas R[1], Hitesh K[1], Sarveda S[2]

[1]*Undergraduates of Electronics and Communication Engineering, REVA University, India.*
[2]*Faculty of Electronics and Communication Engineering, REVA University, India.*

ABSTRACT

The paper presents a new technology called 'REDTACTON' for safer, and securer ATM transactions. This technology uses human body as an Ethernet cable for the transmission of signals, which is why it is named 'Human Area Networking' (HAN). It's basically a device which works when triggered by touch. The signals are transmitted at comparatively high speed of about 10 Mbps on the human body surface, which has a very minute electric field around it. The signals can be transmitted through clothing and shoes as well. The appropriate signals are exchanged between the user and the ATM with a RedTacton transceiver which will be at the user end. And hence, helps in establishing an easy, safe, and secure connection between the user and the machine. This technology eliminates theft of ATM cards, and also makes the carriage of cards unnecessary. Hence, this abolishes the hacking of accounts, and gives complete security.

Keywords:*ATM, Ethernet cable, HAN (Human Area Networking), REDTACTON.*

1. INTRODUCTION

The term RedTacton is originally derived from Japanese word, and is a combination of two words 'Red' and 'Tacton.' The word 'Red' means the color which emphasizes warm and cordial communication, and the word 'Tacton' means Action-triggered-by-Touch. RedTacton is quite a new technology which uses Human-Area-Networking that uses human body as a comparatively high speed, and safe path for transmission. The transmission of data is brought about by the very minute electric field that surrounds the human body. A wide range of actions can result with a simple and single touch, and hence the act of communication. RedTacton has the capability to achieve a maximum data transmission rate of 10Mbps over the human body.

RedTacton enables the exchange of information between two transceivers, and does not need servers to store and process the information. In the year 1996, T G Zimmerman studied and developed this sort of technology for communication using near-body electric field that users could easily attach to their body which out stood among multiple other portable or wearable computers. He imagined the human body as a signal-bus between the computers, and proposed the idea by demonstrating the potentiality of the technology with a prototype, using a frequency of 330 kHz and an alternating electric field of 0.1 to 1 MHz.

With the exponential growth of technology and also the artifice of thieves, it has become necessary to move on to the next level of technology for a safe, easy and secure mode of financial transactions. RedTacton provides us with an efficient way to deal with such problems. In this world with advanced technologies, security is as important safety, and safety is as important as quickness. This technology, unlike other current technologies, is quicker along with providing high security. The quickness can be seen both in digital and physical means. By digital, it means high speed of about 10Mbps which is comparatively higher, and by physical, it means that the user need not get into all the trouble to take the card out of pocket and waste time. A single second makes all the difference and this tech saves a lot of seconds.

This paper contributes some simple solutions to the above mentioned problems by the use of RedTacton directly embedded into the ATM. The RedTacton transceivers can easily carried inside a pocket or it can even be embedded into wrist watches, ornaments or shoes, thus by making it more compact and easily portable.

2. RELATED WORK

After researching a bunch of papers and a few other articles, it is evident that RedTacton technology has a great potential in research and has a wide range of applications.

[1] For the first time in the year 1996, T G Zimmerman studied and developed this sort of technology for communication using near-body electric field that users could easily attach to their body which out stood among multiple other portable or wearable computers. He imagined the human body as a signal-bus between the computers, and proposed the idea by demonstrating the potentiality of the technology with a prototype, using a frequency of 330 kHz and an alternating electric field of 0.1 to 1 MHz.

[2] Many research papers can be found and few project works can also be seen applying this technology in the field of security, health monitoring, and defense systems. One of the main papers that this paper keeps as reference to is a paper presented by a group of four from the R R Institute of Technology on ATM security system.

3. PROPOSED WORK

3.1 Principle of the technology

An AC field is induced over the surface of the body. The body and the transmitter are capacitively coupled with each other. The human body actually acts as a conductor for an AC range of 5-10 MHz band, and for the most part the induced electric field graces over the human body surface and reaches the ground, instead of radiating around the body. At the receiver, this gracing alternating electric field is received and a communication is established, before the field escapes to the ground. Nevertheless, a major part of the induced electric field directly escapes to the ground and a small part gets grounded at the transmitter. The receiver must be very sensitive to establish a stable connection by detecting feeble and variable electric field because the distribution of the field changes around the body as the person moves.

There are three main factors that affects the connection between the transmitter and the receiver. Generally, a small amount of AC voltage is induced on the surface of the human body for stable establishment of the connection. When this is done, the variation of current intensity mainly depends upon three factors. All the three factors depend on the distance ***'r'*** from the body, and are known as the emitted electric field, the quasi-static electric field, and the induced electric field. The emitted electric field varies inversely with the distance (1/r), the induced electric field varies inversely to the square of the distance ($1/r^2$), and the quasi-static field varies with inverse of the cube of the distance ($1/r^3$). Out of the three fields, only quasi-static electric field is used by the technology for near-body electric-field communication as this field drops steeply with the distance (1/r), and also it can be said that it restrains the other two fields. To gain higher sensitivity and to minimize the power requirement, the transmitter is drove with a low frequency.

3.2 Block Diagram

A simple block diagram of an ATM security system is shown in the below figure 1. The main functioning blocks of the design includes DTMF encoder, DTMF decoder, Microcontroller (89C51), Power Supply and LCD. The encoder will always be ready with encoded signals to be communicated with the receiver. And just when the user touches the touch plates at the receiver, which is an ATM, a connection is established between the user and machine. Thereby, the user can make further transactions.

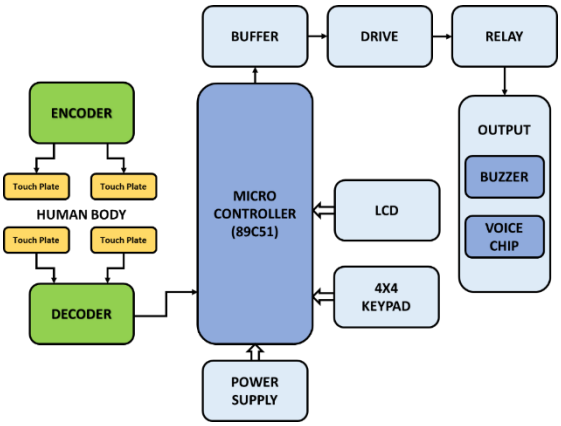

Fig 1. Block diagram of the prototype

The DTMF encoder will be at the user end. It can be made as compact as to embed it inside a wrist watch, ornaments, or it can just be kept inside pockets. The transceiver-encoder module will always ready with signals to be transmitted. The signals at the encoder can be encoded with any encoding techniques. The encoder should always be kept near the human body surface so that it picks up the electric of the human body and uses it to transmit data to the transmitter.

When the receiver receives the signal sent by the transmitter, it has to be first decoded and then authenticated. If the user is authenticated, then a message will be displayed on the LCD and the user is asked to enter the pin, later further actions are carried out. If the user is unauthorized, then a warning signal is sent by the microcontroller and then the buzzer starts ringing and the microcontroller circuit is switched off using the relays and the connection terminates.

4. APPLICATIONS

There are enormous applications of this technology. Few of the fields include

1. One-to-One services.

2. Intuitive operation of personal information.

3. Conference system and wireless headsets.

4. Military and Automobile applications.

5. Medical applications.

5. CONCLUSION

The proposed 'RedTacton' technology for ATM security has been implemented successfully. It is tested using the hardware and software results. RedTacton technology has been one of the latest and advanced technologies in the world which will have tremendous growth in upcoming years. It uses human body as an interface to communicate with the machine, and also it provides high security and reduced theft rate in ATMs. Since the human body itself acts as a transmission medium which cannot be duplicated, there is no problem of hackers.

6. ACKNOWLEDGEMENT

It is our foremost duty to show our regards and gratitude to the people whose constant guidance, support, and encouragement made it possible. We would like to thank our guide Mrs. Sarveda S, Assistant professor, Department of Electronics and Communication, REVA University. Her guidance has been a major support and force in the completion of our project and paper work. We are also immensely grateful to Mr. R C Biradar, HOD, Electronics and Communication Engineering, REVA University for sharing this pearls of wisdom during the course of our project work.

REFERENCES

[1] T G Zimmerman, "Personal Area Networks: Near-field intra-body communication," IBM Systems Journal, Vol. 35, Nos. 3&4, pp. 609–617, 1996.

[2] Atsugi-shi,NTT Microsystem Integration Laboratories, 243-0198, Japan

[3] K Ochiai, H. Sakamoto,M Shinagawa, and T. Asahi, "Human Area Networking Technology: RedTacton," NTT Technical Review, Vol. 3, No, 5, pp. 41–6, 2005.

[4] A Kumar and N. Kumar, RedTacton. UCCIS Vol 3 No 1 ISSN: 0976- 1349 pp. 3-10.54, Jan-Jun 2012.

[5] S JaferSadik, R Mallikarjun Reddy, REDTACTON Based Smart Security Card for ATM Machines, Volume 2, Issue 1, ISSN 2320 – 5121.

[6] Prof. S.V. Phakade, Miss.Susmita GopalJadhav, Miss.MaheshwariAmrutraoJagadale, Miss.ShitalShrikantPatil, Red-Tacton HAN Based ATM Machine Control System, e-ISSN: 2395 - 0056, p-ISSN: 2395-0072