2nd National Conference on Recent Innovation in Engineering, Science, Humanities and Management
REVA University, Yelahanka, Bangalore, (India)
29th-30th March 2019 www.conferenceworld.in ISBN : 978-93-87793-79-8

Autonomous Lavatory Cleaning Robot

A N Jothi Sreeram Dutt[1], A Rahul[1], Abhishek Sarkar[1], Neha Rani[1], Prof. Dilna U[2]

[1]*School of E.C.E., REVA University, India*

[2]*School of E.C.E., REVA University, India*

ABSTRACT

The concept of using a robot for the purpose of sanitation can be drawn many parallels to present day technologies such as fire-fighting, dishwashing and search and rescue missions. At present, the cleaning process is entirely operated with the hands rather than by a robot and not very high-yielding.The Autonomous Lavatory Cleaning Robot proposed can greatly eliminate the extent of manual labor involved in the process of maintaining sanitary standards. As municipalities moving towards solutions which can ameliorate the existing problems while being cost effective, this systemfocuses on the actual concerns and provides the best solution. It can be used to clean household toilets, toilets and toilets in mall,stadiums, and supermarkets. Itcanalso be used to uphold hygiene standards in trains and aircraft, where it holds primary importance.

Keywords: Autonomous,hands-free, hygienic, robotic-arm, robust.

I. INTRODUCTION

In today's society, urban sanitation is of primary importance and there are a number of obstacles that need to be conquered.An easy yet effective method to facilitate the preservation of hygienic standards would be implement edbe a welcome idea and would help to overcome the various hurdles facing people. reluctance to engage in such a task. With this in mind, a viable idea would be to design a robot that is fully automated in functioning is competent in performance. Other considerations include ease of operation, power requirements and financial effectiveness. This idea is very practically realizable using a low - power microcontroller and a simple yet adequate line follower robot. In day - to - day applications, integrated robotics application is becoming more common. The idea presented in this paper aims to provide an easy and trouble - free means means of cleaning public toilets whilst maintaining hygienic and sanitary standards parallely. The cleaning operation is fully automated and requires low power to operate. In addition, a robotic arm is part of the module to clean the toilet bowl thoroughly. Such a provision will greatly curtail the role of manpower in maintaining public toilets and thus serve as a win - win situation ; a revolting goal is accomplished with great ease.

II. RELATED WORK

Through research of a lot of IEEE papers and few other articles makes it evident that ALCR has a lot potential in robotics research and can be used for household and public application.

2.1 VirendraPatidar and RituTiwari[5] says that " There are various factors that affect the performance of a robotic arm and how it change a robotic arm in work efficient arm."

2.2 N Mustaffa and M H Ismail[6] says that The main focus of this project was to design and develop the mechanism for robotic arm for lifting.The mechanical arm was planned with four degrees of freedom and customized to achieve precisely basic light material lifting errand to aid the creation line in any industry.

III. PROPOSED WORK

3.1 Working of ALCR

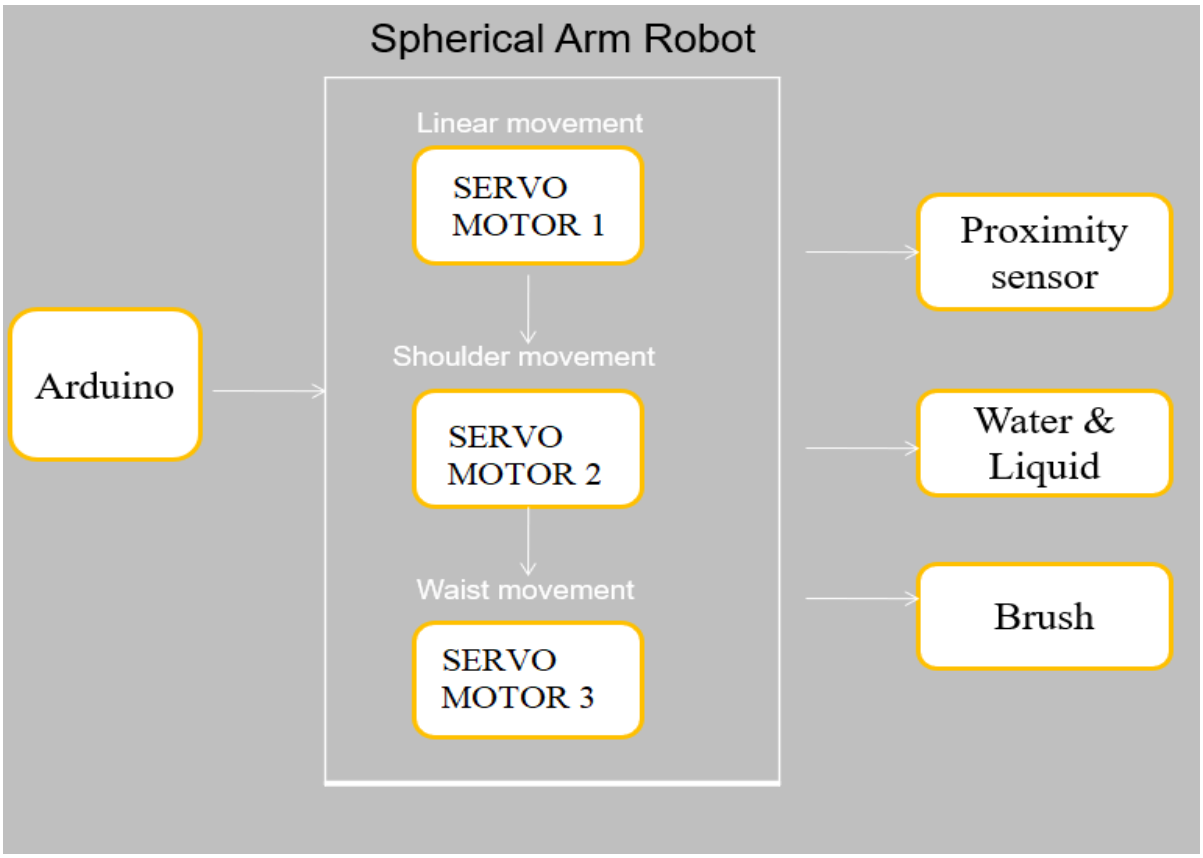

Fig 3.1.1 Block diagram

The ALCR system consists mainly of the spherical robotic arm[2] which will show movements of the arm in three directions- circular, angular and linear. The circular and angular movement will help to clean the entire lavatory whereas the linear movement will be based on the different curvature of the lavatory. The IR sensor[5] present in the system will determine the linear movement of the arm. This allows the ALCR system mounted at the top of the lavatory to clean it completely. The components are assembled as shown in the block diagram Fig.-3.1.1 above.

ISBN : 978-93-87793-79-8

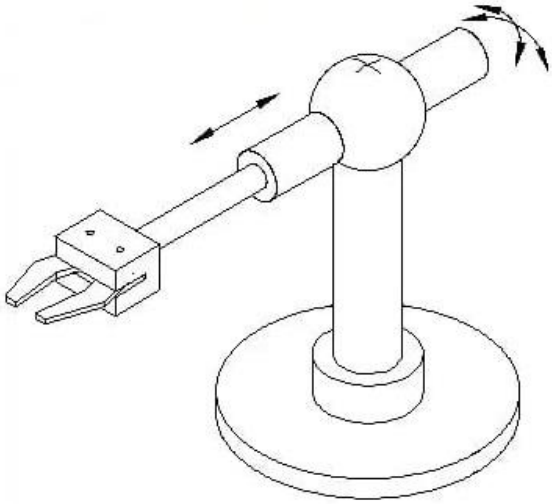

Fig 3.1.2 Arm movement

In the above Fig.3.1.2**,** the robotic arm of the ALCR system is shown. There are four servo motors, each motor for one Degree of Freedom and the motors operate with 5 volts. The servo motor1 is used to rotate the robotic arm to an extent of 180 degrees as required. The servo motor2 is used to move the arm in angular direction to an extent of 180 degrees. The servo motor3 and servo motor4 is used to move the arm in linear direction. The linear movement depends on the distance between curvature of the lavatory and the arm which is determined using IR sensor.

3.2 THE HARDWARE SETUP

The hardware design for any ALCR system is an interactive and an important phase, as all components and/or parts are assembled to build one complete system.

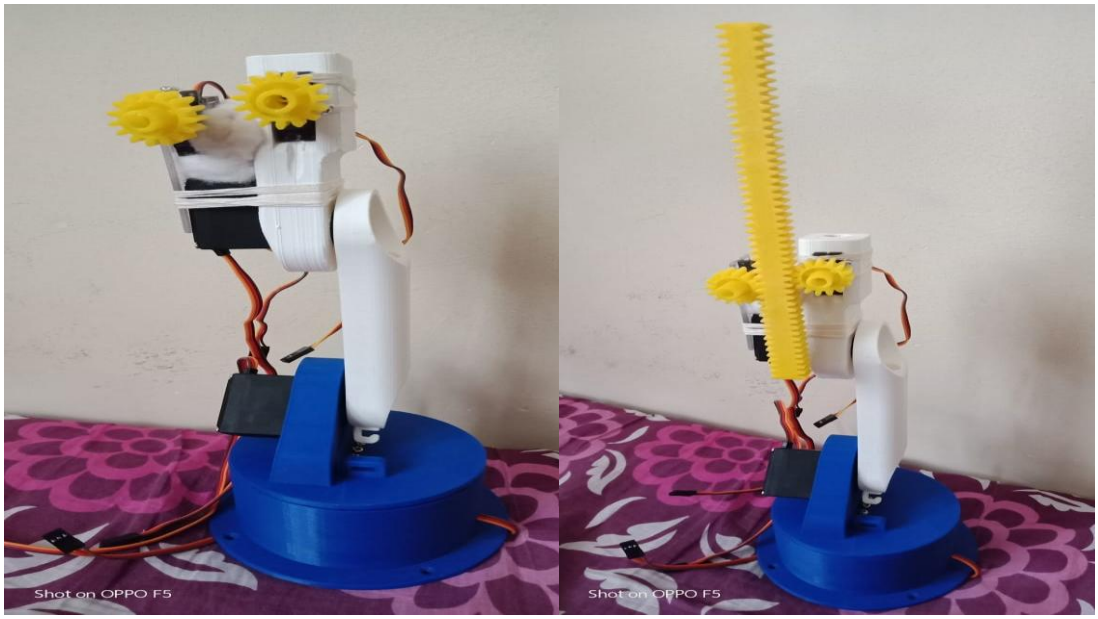

Fig 3.2.1 Robotic arm

ISBN : 978-93-87793-79-8

The robotic arm in ALCR system consists of servo motors which are used to move the arm in circular, angular as well as linear directions. The linear movement of the arm is possible with the use of rack and pinion as show in Fig.-3.2.1 above. The IR sensor used is required to determine the extent to which the arm is required to move in linear direction.

IV. HARDWARE AND SOFTWARE REQUIREMENTS

Table:4.1 Hardware and software requirements

SL. NO.	HARDWARE REQUIREMENTS	SOFTWARE REQUIREMENTS
1.	Arduino UNO	Arduino programming
2.	Servo Motor	
3.	IR Sensor	
4.	Rack and Pinion	
5.	Robotic Arm	
6.	Breadboard	
7.	Brush	

VI. CONCLUSION

The operation of toilet cleaning being integrated into a versatile, self-operational robot is something that has not been attempted before and is what makes this system unique. On the whole, by improving upon existing concepts and by incorporating new features, the Automatic Lavatory Cleaning Robot becomes a highly effective and utilitarian system.

The advantages of this robot are its cost-effective modules, Highly automated system: The human element in the system is minimized to the level of the sporadic cleaning of the brushes and refilling of the cleaning liquid. iii) Implementing RFID module is exceedingly gainful in a number of ways; it is cost effective and does not require a line-of-sight communication, possesses high speeds of operation and is best suited in tough environments.

After successfully implementing the robot, it can be improved by adding additional cleaning modules to focus on other parts of a bathroom, such as wash basins and walls.. This additional element will serve to make the robot a business item and it tends to be sold as a healthy bundle to substitute manual cleaning of bathrooms. The major drawback of this is that the movement of servo motor is restricted to 180 degrees. To overcome this instead of servo motor we can try brushless dc motor to improve its efficiency.

REFERENCES

[1]S.M. Ashiq. K. Karthikeyan, S. Karthikeyan (2013, Feb.). "*Electrical Fabrication of Semi Automated Pressurized Flushing System in Indian Railway Toilet"*. International Journal of Engineering and Advanced Technology (IJEAT).[On-line]. 2(3), pp Available: [Aug. 15, 2015].

[2] D. Kokvin, G.Sziebig, W.D. Solvang. Design of a *"Robotic Arm for Automatic cleaning of cargo containers"*, presented at the 4th International Conference on Cognitive Infocommunications (CogInfoCom),Budapest, Hungary

[3] I. Matijevics. "*Infrared Sensors Microcontroller Interface system for Mobile Robots"*, presented at the5th International Symposium on Intelligent Systems and Informatics, Subotica, Hungary,*2007*.

[4]H. Park. S.Baek, S. Lee."*IR sensor array for mobile robot"*, presented at the International Conference onAdvanced Intelligent Mechatronics,Monterey, USA, *2005*.

[5] VirendraPatidar, RituTiwari. "*Survey of Robotic arm and Parameters*", presented at the International Conference on Computer Communication and Informatics, Coimbatore, India,*2016.*

[6] N Mustaffa and M H Ismail. "*Design and Development of a Mechanism of Robotic Arm for Lifting*", presented at the Integrated Design project conference, Malaysia,*2015.*