2nd National Conference on Recent Innovation in Engineering, Science, Humanities and Management
REVA University, Yelahanka, Bangalore, (India)
29th-30th March 2019 www.conferenceworld.in ISBN : 978-93-87793-79-8

Efficiency improvement of Solar panels using Water cooling tubes

Behar Sushank A[1], Naga Phanendhra B[1] , Saikiran B [1], Uday Kumar[1], Devanathan M[2]

[1](*School of ECE,Reva University, India)*

[2](*School of ECE,Reva University, India)*

ABSTRACT

In this project, array of water tube is fitted to back of solar panel to reduce its temperature and bring temperature to normal operating point. Before this both normal solar model and water-cooling model conditions are investigated under normal operating condition. After getting result for various model we compared our back water cooling tube array results with the ordinary solar panel. The solar panels with water cooling tubes gives much efficiency and power produced by them are good when it is compared the normal solar panels. Keeping the solar panel upper surface clean and there should be no dust on it.

Keywords – Solar panels, Cooling tubes, Efficiency, Temperature

I. INTRODUCTION

One of the major renewable sources of energy is the solar energy. In photovoltaic solar technology a panel consisting of many solar cells is used. The photovoltaic process converts sunlight – the most abundant energy source on the planet, directly into electricity. The sun emits photons (light), which generate electricity when they strike a photovoltaic cell. So in the same way a photovoltaic cell, made from a semi-conducting material, is a device that converts light into electricity

Different techniques have been used to improve the performance of photovoltaic (PV) modules and reduce the cost of the systems. Some of these techniques are based on increasing the incoming radiation on the PV cells surface to reduce the PV panel area, which can be achieved by using solar concentrators, lenses, and/or using solar tracking. The PV module will give the non-linear power characteristics when there is problem in manufacturing times and also when the solar panel reached maximum operating temperature. The objective is to improve the efficiency of solar panels by using water cooling tubes this also leads to decrease the heat on solar panels and also keeping the solar panels clean.

II. PROBLEM DEFINATION

The problem associated with the increase in PV cell temperature above the operating limit and reduction in cell efficiency and probably cell damage in case of overheating. Therefore, PV cell requires an efficient cooling process, especially during hot weather. Excessive heat significantly reduces the overall efficiency of the solar

ISBN : 978-93-87793-79-8

panel. As the temperature increases the voltage output decreases linearly. Hence to counter this problem cooling system is placed so as to eliminate excessive heating of the panel.

III. PROPOSED WORK TO IMPROVEMENT OF SOLAR PANELS EFFICIENCY

The objective is to improve the efficiency of solar panels by using water cooling tubes this also leads to decrease the heat on solar panels and also keeping the solar panels clean.

3.1 BLOCK DIAGRAM:

This block diagram shows how to connect the components. Here microcontroller works with supply voltage of +5v. Here in the Lcd display, it shows the temperature on the panel, power getting from panel, voltage stored in the battery. When the solar panel gets charging,the voltage is generated and it passed to the voltage circuit. Since the voltage circuit is connected to microcontroller having the component ADC (analog to digital converter) to see how much voltage getting from solar. Here Boost circuit is to boost or stabilizes the voltage and passed it to the storage battery and the components connection shown in below fig3.1

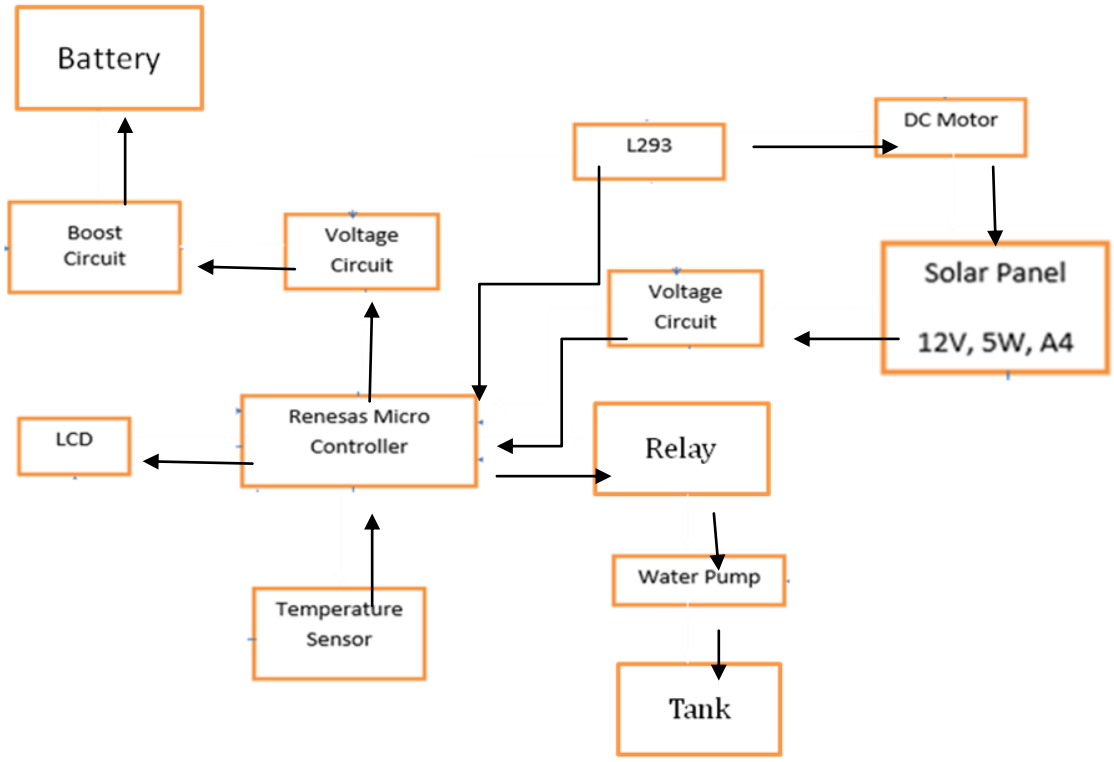

Fig[1] shows the connection of components for efficiency improvement of solar panels using water cooling tubes.

ISBN : 978-93-87793-79-8

Hardware and Software Components

RENESAS MICROCONTROLLER: It is industrial and general purpose microcontroller which has 128 pins. It has 3UART ports. So this microcontroller is capable of handling more functions.

L293D MOTOR DRIVER: The L293D IC receives signals from the microprocessor and transmits the relative signal to the motors. It has two voltage pins, one of which **is used** to draw current for the working of the L293D and the other **is** used to apply voltage to the motors.

TEMPERATURE SENSOR: It is a LM35D temperature sensor .The sensor element built into the temperature sensor takes the actual measurement and converts the measured temperature into an electrical signal.

RELAY: A relay is an electrically operated switch. It can operated with low voltage, relays were used extensively in telephone exchanges and for some applications.

BATTERY: It is used to store the power and it supply power to the loads.

OTHER COMPONENTS: Boost circuit, voltage circuits, LCD display

Cube suite+

3.2 HARDWARE SETUP

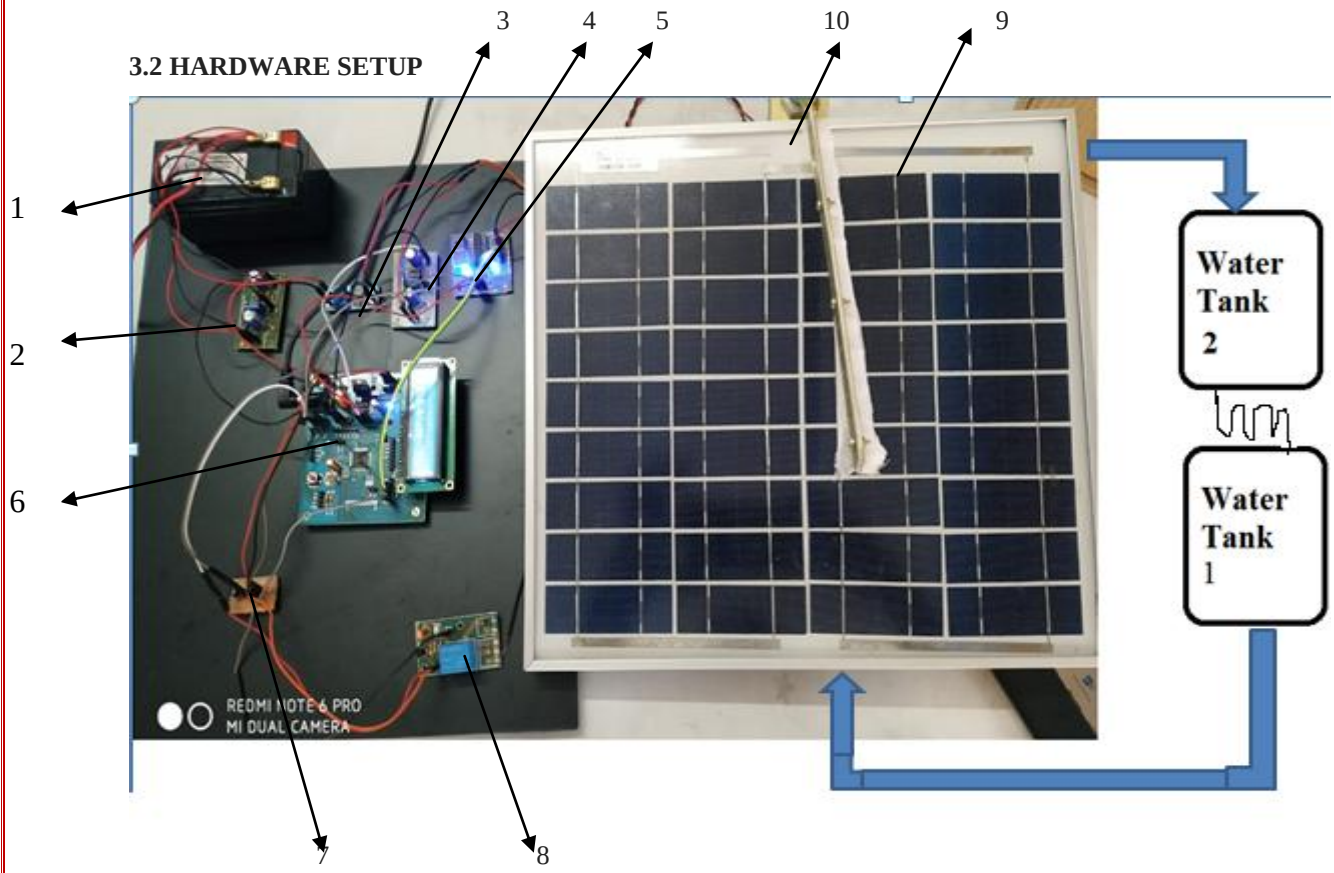

Fig 3.2 shows the module of the solar panel

1. Battery 2. Voltage divider-1 3.Boost circuit 4. Voltage divider-2 5. L293D driver motor 6.RenesasMicrocontroller 7. Temperature sensor 8.Relay 9. Solar panel 10. DC motor

In 3.2 Fig, here temperature sensor monitor the temperature of the solar panel and when temperature goes beyond the operating point the microcontroller sends the signal the relay to pump the water on the back of solar panels. This water pumping process will not stop until the solar panel gets normal temperature. The dirt and dust on the solar panel gets cleaned by the wipers for every 10 hrs. The dc motor having wipers is attached to the L293d Motor driver which drives the movement of dc motor. The power getting from the solar panel is passed to battery through the voltage circuits and boost circuits. We can see the how much voltage getting from the solar panel and also we can see the power in the battery which is showed in LCD display. The water from Tank-1 is passed on solar panel to reduce the temperature of system. That warm water is send to Tank-2 and that water is passed to Tank-1 in a zigzag manner which reduces the water temperature.

3.3 SOLAR PANEL EFFICIENCY VS TEMPERATURE

Solar panel efficiency is a measurement of how much of the sun's energy a certain panel can convert into usable electricity. This is done by capturing the electric current generated when sun light having photons interact with silicon crystalline or thin film cells inside a solar panel. These solar cells are tightly packed alongside each other inside glass rectangles designed to attract sun light. Then the energy is converted, sends to circuit breaker box and distributed to the loads.

Generally, the solar panel converts approximately 21% of the available energy in to electrical power. This may not good sound, but it is much better. The solar panel gives maximum power at which their maximum operating point reaches. If the sun produces 100% energy, solar systems are able to process 9-11% of the sun's energy in to usable power when the system got overheated for some time. In this cases, by using cooling tubes and pumping the water on the back of solar panels can bring down or reduces the temperature to normal operating point. This process can improve the efficiency by 10-12% .This process leads to results in giving more power production and it maintains the health of solar system good and this extend the life span of solar panel of 15-20 years more.

IV. CONCLUSION:

Water cooling of solar panels can improve the efficiency, photovoltaic energy conversion and power production of the panels is increasing by decreasing temperature and operated at its below operating temperature, this leads to increase the life cycle of solar panels. The major advantages of this technique are:

1) By passing water on the solar panels, it increases cooling efficiency.
2) Maintaining the PV module upper surface free of dust due to continuous water flow.
3) This technique is simple and low cost.

REFERENCES

[1]. Mrs. Rupali Nazar review on *"Improvement of efficiency of solar panel using different", International Journal of Electrical and Electronics Engineers, ISSN-2321-2055 (E)IJEEE,Volume 07,Issue 01, January-June 2015*

[2]. Mr. Sayaran A. Abdulgafer et al. review article on "*Improving the efficiency of polycrystalline solar panel by water emersion method" International Journal for innovative research in science, ISSN 2319-8753, Volume 3, Issue 01, January -2014*

[3]. Mr. B.Balamuralikrishnan et al. review article on *"Efficiency enhancement of photovoltaic cell" International Journal of Electrical Electronics Instrumentation Engineering ISSN 2320-3765 , Volume 03, Issue 04, May-2014*

[4]. Mr. Saurabh Mehrotra et al. review article on *"Performance of a solar panel with water immersion cooling technique" International Journal of Science, Environment ISSN 2278-3687 (O), Volume 3, No 3, 2014, 1161 – 117*

[5]. Dubey S, Tiwari GN. *"Thermal modeling of a combined system of photovoltaic thermal (PV/T) solar water heater. Sol Energy "2008; 82:602–12.*

[6]. Batoul H. *"Flow simulation improves photovoltaic solar panel performance",Technical Report, Schueco International, Paris, France, and September 2008. <http://www.schueco.com/>.*

[7]. Tonui JK, Tripanagnostopoulos Y.*" Improved PV/T solar collectors with heat extraction by forced or natural air circulation. Renewable Energy" 2007; 32:623–37.*

[8]. Kluth A.*" Using water as a coolant to increase solar panel efficiency" ,California State science fair, California, USA, April 2008.*

[9]. Tang X, Quan Z, Zhao Y.*" Experimental investigation of solar panel cooling by a novel micro-heat pipe array. Energy Power" Eng 2010; 2:171–4.*