2nd National Conference on Recent Innovation in Engineering, Science, Humanities and Management
REVA University, Yelahanka, Bangalore, (India)
29th-30th March 2019 www.conferenceworld.in ISBN : 978-93-87793-79-8

MICROCONTROLLER BASED ANAESTESIA INJECTOR

Sudha Manogna, Valluru Mallishwari, Venkat Reddy T, Vijaykumar M, K Durga Prasad

Electronics and Communication Engineering, REVA University, India

ABSTRACT

In the hospitals, any major operation is performed the patient must be in anesthetizing condition. If the operation lasts for a long time, say for suppose for 4 or 5 hours, anaesthesia cannot be given in a single stroke to the patient. Over dosage may cause a critical condition for the patient's towards death. If lower amount of anaesthesia is to the patient, they may wakeup at the middle of the operation. Overcome this problem, the anaesthetist administers few millilitres of anaesthesia per hour to the patient in a particular time period. If the anaesthetist fails to administer the anaesthesia to the patient at the particular time interval. Overcome this problems the design of an automatic operation of an anaesthesia machine based on a microprocessor is effective. In this system a keypad is provided along with the Microprocessor and syringe infusion pump. The anaesthetist can set the level of anaesthesia in terms of millilitres per hour to administer anaesthesia to the patient with the help of keypad. When signal is received. After receiving the signal from the keypad, the Microprocessor controls the signal to the desire level and fed into the pump.

Keywords: Microcontroller*, sensor, *Anaesthesia, AAI, syringe, Anaesthetist.

I. INTRODUCTION

Major operations are performed to remove or reconstruct the infected parts in the human body. These operations will lead to blood loss and pain. Therefore it is necessary to arrest the pain and the blood loss. Anaesthesia plays an important role in the part of painkilling. **AAI** can be defined as "Automatic administration of anaesthesia based on the bio- medical parameters of the patient, eliminating future side effects and the need for an anaesthetist." Anaesthesia is very essential in performing painless surgery and so an Automatic administration of Anaesthesia is needed for a successful surgery. At present anaesthetist controlled manual operation is employed, which may cause many difficulties such as level of anaesthesia may get varied and there is a chance of getting side effects in future. If suppose the anaesthetist fails to administer the level of anaesthesia during the predetermined period, the patient may be disturbed during the operation. Other systems developed to administer anaesthesia operates by sensing the consciousness level of the patient and not by measuring his overall body conditions. Embedded systems are used in many applications in medical field for controlling various biomedical parameters and monitoring biomedical signals. In this design, a micro- controller is used for controlling the

ISBN : 978-93-87793-79-8

anaesthesia machine automatically, depending upon the various biomedical parameters such as body temperature, heart rate, respiration rate, etc.

III.PROPOSED WORK

Now days, Embedded systems are used in many applications in medical field for controlling various biomedical parameters. In this design, a microcontroller based anaesthesia is machine automatically, depending upon the various biomedical parameters like temperature, heart beat, blood pressure respiration rate etc. Advantages of proposed system

- The need for an anaesthetist is eliminated.
- Level of anaesthesia is not varied, so future side effects are eliminated.
- IR detector is used monitor the anaesthesia level

IV. HARDWARE AND SOFTWARE REQUIREMENTS

HARDWARE REQUIREMENTS	SOFTWARE REQUIREMENTS
1. Sensors 2. Power Supply 3. Liquid Crystal Display 4. Arduino 5. Pump	1.Arduino IDE 2.Embedded C Program

V. WORKING AND BLOCK DIAGRAM

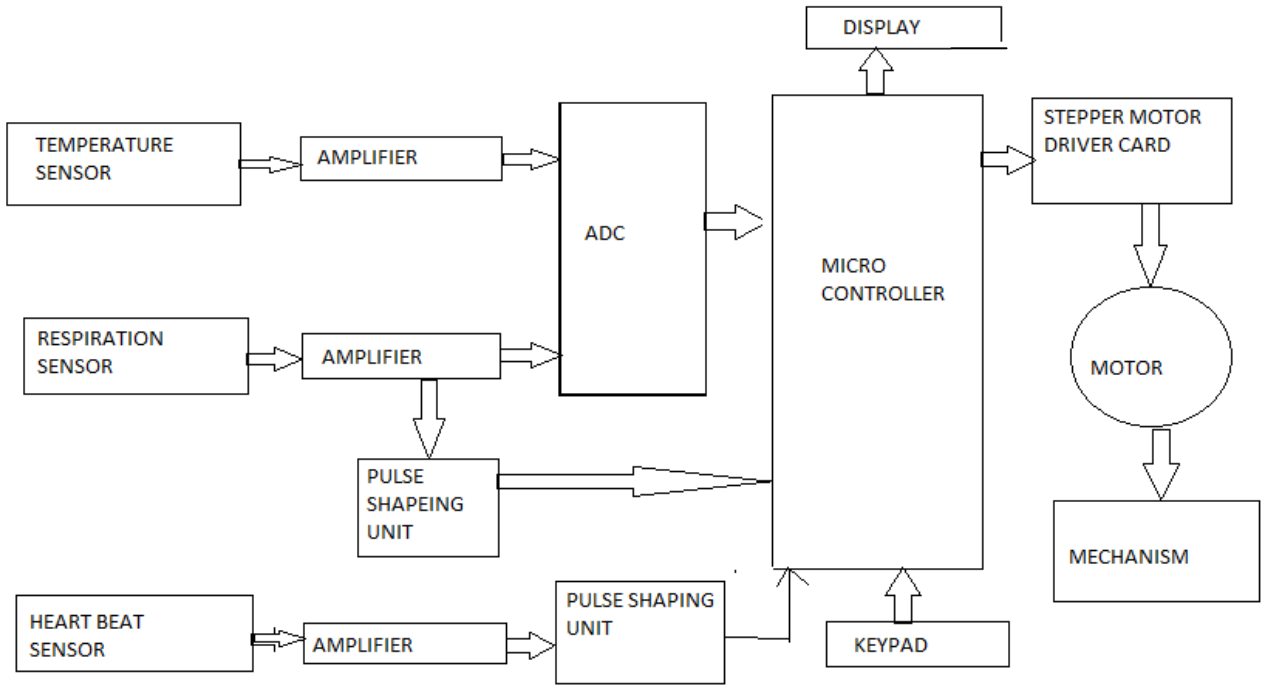

Fig 1. Block Diagram

ISBN : 978-93-87793-79-8

5.1 MICROCONTROLLER

A Microcontroller is a general purpose device that is meant to read data, perform limited calculation on that data and control its environment based on those calculations. The prime use of a microcontroller is to control the operation of a machine using a fixed program that is stored in ROM and that doesn't change over the lifetime of the system. A Microcontroller is highly integrated chip that includes all or most of the parts needed for controller in a single chip.

5.2 TEMPERATURE SENSOR

The most accurate method to measure temperature is to use Thermistor. In this we are using LM35 series integrated circuit temperature device. The LM35 device does not require any external calibration to provide typical accuracies at room temperature and over a full -55'C to 150Ç range.LM35 temperature sensor is cheapest in price and one can easily find it in market. The advantage of LM35 is more efficient than thermistor and no chance of damaging of internal circuit. It draws current in micro Amperes.

5.3 HEART BEAT SENSOR

A heart beat sensor shall be used to replace the ECG machine. This sensor shall use optical method to sense blood flow in veins and convert that to heart beat. Heart beat sensor connected to the port1.0 pin of the microcontroller is used for monitoring the pulses of the heart. . Primary Applications of Heartbeat Sensor are:

- Works as a Digital Heart Rate monitor
- Works as a Patient Health Monitoring System
- Used as a Bio-Feedback control of robotic applications

5.4 RESPIRATION SENSOR

The primary functions of the respiratory system are to supply oxygen to the tissues and remove carbon dioxide from the tissues. The action of breathing is controlled by muscular action causing the volume of the lung to increase and decrease to affect a precise and sensitive control of the tension of carbon dioxide in the arterial blood. Under normal circumstances, this is rhythmic action.

5.5 LCD DISPLAY

A liquid crystal display (LCD) is a thin, flat electronic visual display that uses the light modulating properties of liquid crystals (LCs). LCs don't emit light directly. A 16X2 display module is employed to display 16 characters in 2 rows. LCD has two registers namely command and data. The command instruction stores the command instructions given to LCD. Data register stores data to be displayed on LCD. It uses the low electrical power.

5.6 WORKING

Working The keypad provided along with the Microcontroller, the anesthetist can set the level of anesthesia to

ISBN : 978-93-87793-79-8

be administered to the patient in terms of millilitres per hour (1ml to 1000ml).After receiving the anesthesia level from the keypad, the Microcontroller sets the system to administer anesthesia to the prescribed level. It then analyses various bio-medical parameters obtained from the sensors to determine the direction of rotation of the stepper motor. The rotation of the stepper motor causes the Infusion Pump to move in forward or in a backward direction and the anesthesia provided in the syringe is injected into the body of the patient. If the level of anesthesia is decreased to lower level than the set value, the alarm gets activated to alert the anesthetist to refill the anesthesia in the syringe pump to continue the process. In this design, the total timing and opposite flow of blood will also be detected by using processor. The measurement of bio-medical parameters is a vital process. These parameters determine the overall condition of the patient. It plays a very significant process in the level of anesthesia that has to be administered to the patient. Only based on these parameters the movement of the stepper motor is determined and load cell is used to determine to weight of the patient

Transducers and Thermistors are the key links in all sensors designed to describe and analyze the bio-medical parameters. The transducers used here are just those that find applications in patient monitoring systems and experimental work on four parameters namely blood pressure, temperature, pulse and respiratory activity. Both transducers and Thermistors are made in a wide variety of forms suitable for use in medical applications.

VI RESULT

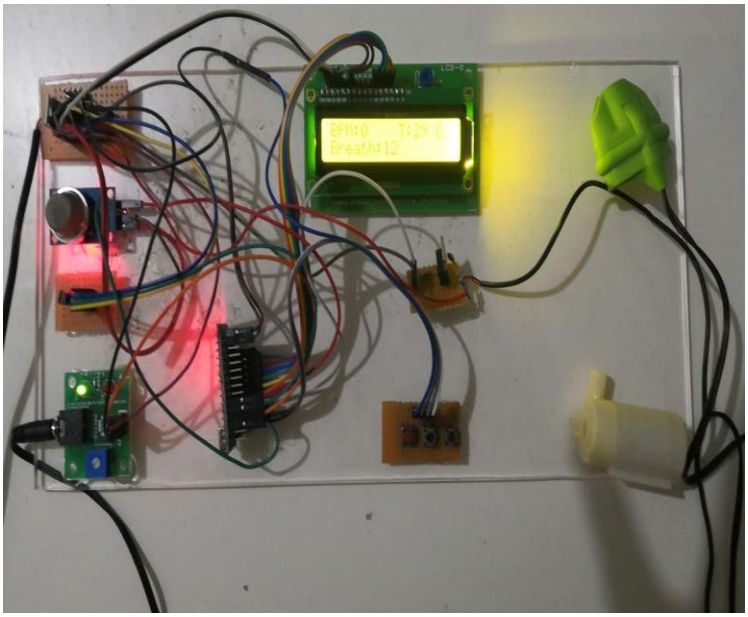

Fig. 2 Hardware connections of block diagram

The above fig 2 represents hardware connections of block diagram. The need for anaesthetist is eliminated. Level of anaesthesia is not varied so the future side effects are eliminated.IR detector is also included in the system for monitoring the total anesthesia level for the entire period of the surgery time.

VII. CONCLUSION

The microcontroller read the signal from the heartbeat sensor and temperature sensor, and its corresponding change in heartbeat and temperature of the patient the anaesthesia is to be given . Anaesthesia Machine is efficient protecting systems which is very useful for surgical side. Which is used for Major operation of the patient and its very comfort for the doctor who gave treatment to the patient, and so it's very chap machine used in commercial operation also it fully automated

REFERENCES

[1]. JCAHO. Joint Commission on Accreditation of Hospital Organization Sentinel Event Alert No. 32: Preventing, and Managing the Impact of, Anesthesia Awareness. Available at: http://www.jointcommission.org/SentinelEvents/SentinelEventAlert/sea_32. htm. Accessed October 23, 2008

[2]. Samuelsson P, Brudin L, Sandin RH. Late psychological symptoms after awareness among consecutively included surgical patients. Anesthesiology 2007;106:26–32

[3]. Mashour GA, Wang L, Turner CR, Vandervest JC, Shanks A, Tremper KK. A retrospective study of intraoperative awareness with methodological implications. AnesthAnalg 2009;108:521–6

[4]. Smith I, Monk TG, White PF, Ding Y. Propofol infusion during regional anesthesia: sedative, amnestic, and anxiolytic properties. AnesthAnalg 1994;79:313–9

[5]. White PF, Negus JB. Sedative infusions during local and regional anesthesia: a comparison of midazolam and propofol. J ClinAnesth 1991;3:32–9

[6]. Cork RC, Heaton JF, Campbell CE, Kihlstrom JF. Is th