2nd National Conference on Recent Innovation in Engineering, Science, Humanities and Management
REVA University, Yelahanka, Bangalore, (India)
29th-30th March 2019 www.conferenceworld.in ISBN : 978-93-87793-79-8

Design and Implementation of E-Glasses for Pollution Control

Joel Ebenezer, Mithun.P, M.V.S. Divija, Ruman Pasha
Shrikant S Tangade
School of Electronics and Communication Engineering, REVA University, India

ABSTRACT
Pollution is causing a severe damage to human health, considering either air or noise pollution those effects on human health are adverse. Even though there are equipments to control them the major drawback here comes in employing them and maintaining them properly. Also they are highly expensive. E-Glasses here provides a cheap and best solution to control the effects of pollution on human health. Here several systems are arranged at different places to control the effects of pollution. The system placed at the ear side frame of the glass controls the noise pollutants intake where the user is free to select either zero intake or the partial intake of the pollutants. The other system which is placed inside the nosepads of the glass consists of a magnet that repels the air pollutants thereby reducing its intake. Here the glass frame also acts as protector from air pollutants and additionally consists a wireless camera equipped to record and review the video whenever required.

I. INTRODUCTION

Air pollution occurs when harmful or excessive quantities of substances including gases(so2), particles(CFC &HFC) and biological molecules(C,H&O) are introduced into Earth's atmosphere. It may cause diseases, allergies ,lung related issues and even death to humans.Both human activity like(industries and automobiles) and natural processes can generate air pollution.Noise pollution is the propagation of noise caused by machines, transport and propagation systems that has an harmful impact on humans and animals.Unwanted sound (noise) can damage physiological healthlike it cause hypertension, high stress levels, tinnitus, hearing loss, sleep disturbances, and other harmful effects.This project deals with the reduction of the impact of pollution on human health by employing it at the places where it enters the human body.Like the system that controls the noise pollutants intake is placed on the ear side frame and that controls the air pollutants intake is placed on nose pads where glasses also helps in its function to reduce its intake. In addition to these there will be a wireless camera equipped on the eye frame which records the video and sends it to the user . Here it is used to carry out the work which is actually done with a huge setup thereby reducing the difficulty to employ it.

E-Glasses is a Portable and efficient solution for pollution control .Maintenance is easy.Reduces the maximum intake of air and noise pollutants there by reducing its effects on the human health.Power supply is continuous and long lasting , since sensors are being used .It can be used in places like traffic where hearing sounds like horning, indicators etc is necessary but it is used to avoid the excess noise reaching the ears.It can be used in places like libraries, conference halls etc where zero noise is the priority.It can also be used to record the lectures in the class room or the presentations which can be viewed later for future references.

II. RELATED WORK

Several techniques like cyclones,scrubbers, electrostatic precipitators,baghouse filters etc are in use to reduce air pollution.Here the pollutants are collected or trapped by these devices.Once collected these particulates adhere to each other forming agglomerates that can beeasily removed from the equipment and disposed of.A cyclone removes particulates by causing the dirty airstream to flow in a spiral path inside a cylindrical chamber so that it enters the chamber from a tangential direction at the outer wall of the device, forming a vortex as it swirls within the chamber. Here the larger particulates, because of their greater inertia, move outward and are forced against the chamber wall and are slowed by friction with the wall surface, they then slide down the wall into a conical dust hopper at the bottom of the cyclone. The cleaned air swirls upward in a narrower spiral through an inner cylinder and emerges from an outlet at the top where the accumulated particulate dust is periodically removed from the hopper for disposal.Devices called wet scrubbers trap suspended particles by direct contact with a spray of water or other liquid. A scrubber washes the particulates out of the dirty airstream as they collide with and are entrained by the countless tiny droplets in the spray.Electrostatic precipitation is one of the commonly used method for removing fine particulates from airstreams where particles are suspended in the airstream are given an electric charge as they enter the unit and are then removed by the influence of an electric field. The precipitation unit comprises baffles for distributing airflow, discharge and collection electrodes, a dust clean-out system, and collection hoppers. A high voltage of direct current (DC), as much as 100,000 volts, is applied to the discharge electrodes to charge the particles, which then are attracted to oppositely charged collection electrodes, on which they become trapped [4].

Noise control for aerodynamic sources include quiet air nozzles, pneumatic silencers and quiet fan technology.They work on principles like sound insulation,sound absorption, vibration damping and isolation which reduces the noise as close as to the source itself. Pneumatic silencers are designed for installation on exhaust circuits to reduce the noise levels of equipment while operating . When the fast moving air stream from an open pipe comes into contact with the surrounding static air , turbulent air flow is generated which creates excess noise. So air nozzle is used at the open pipe end which maintains the blowing force while reducing the sound level. Quiet fan technology reduces the tonal noise at the source at the fraction of the cost of traditional silencers etc, and by achieving greater noise reduction eith out increased power consumption [3].

Spy cameras are generally used to record the video with out the knowledge of the person whom we are recording. Here wireless camera does not stores the video rather it transmits the video signal online or it might transmit to a receiver that records to an internal memory or DVR [1].

III. PROPOSED WORK

3.1 BLOCK DIAGRAM

The block diagram includes 3 systems namely ear system, eye system , nose system whose input are pollutants of air and noise pollution respectively and output which reduces their intake. The systems are as follows:

ISBN : 978-93-87793-79-8

3.1.1 EAR SYSTEM

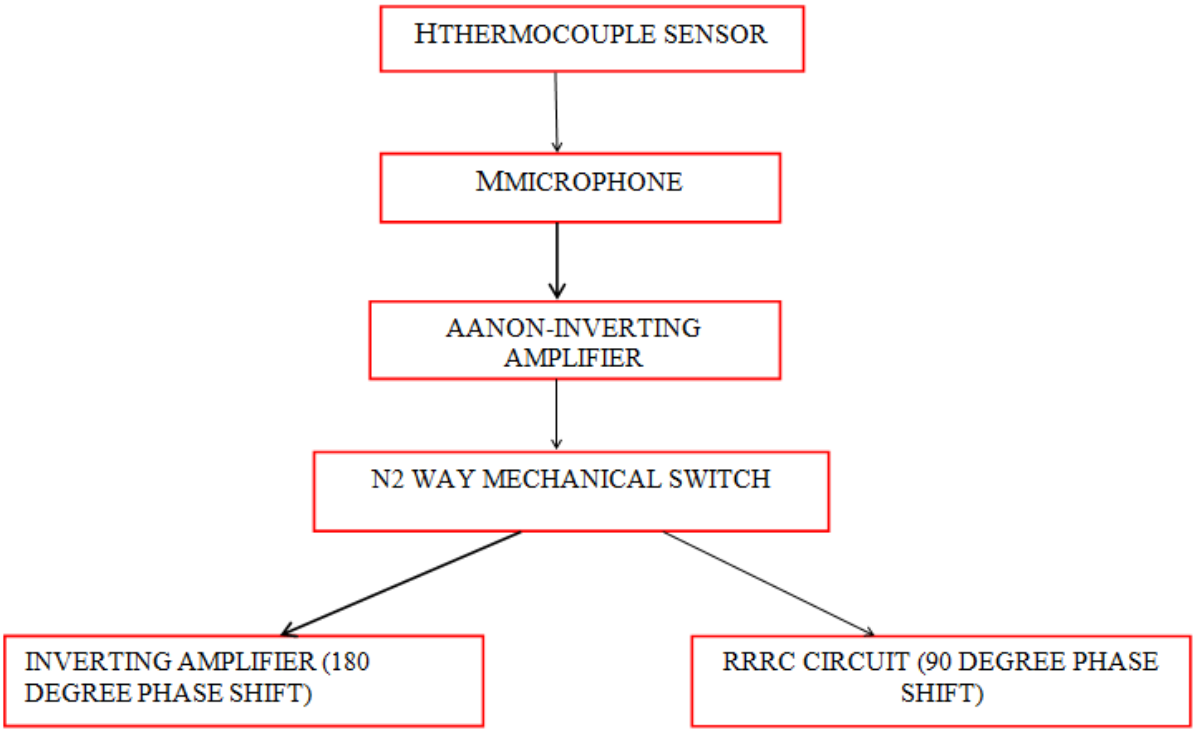

3.1.2NOSE SYSTEM

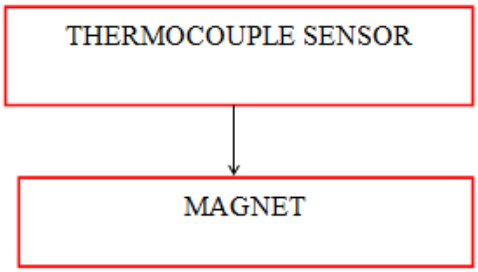

3.1.3 EYE SYSTEM

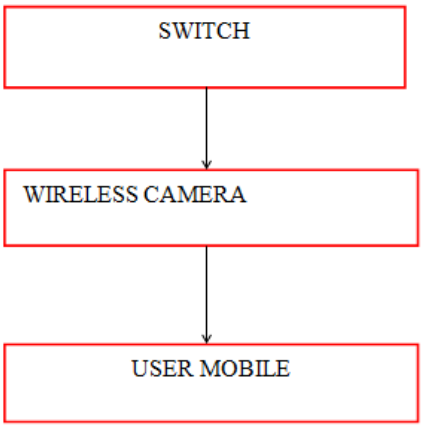

ISBN : 978-93-87793-79-8

3.2 CONCEPT OF WORKING

When the glasses are on the user the ear system which is equipped at the ear side frame is activated with the help of the thermocouple sensor that converts heat into electricity. This activates the microphone which gives analog output with respect to the input noise .The output voltage from the microphone is amplified with the help of an non-inverting amplifier. Here the user is free to choose either he requires a peaceful environment or partial noise environment with the help of a switch. If he chooses a peaceful environment the amplified signal is sent to the inverting amplifier whose output is same as input but with 180 degree phase shift which gets cancelled with the input thereby creating a no noise environment around him. Rather if he chooses a partial noise then the amplified signal be sent to the RC circuit whose output is 90 degree phase shift of the input signal resulting the half noise environment around him.

With respect to nose system the thermocouple sensor placed inside the nose pad will be in contact with the skin there by converting heat to electricity which is used to activate the magnet. The magnet after being activated repels all the pollutant gases there by reducing their intake. Here the gases like co2,so2 and nitric oxides are having less magnetic susceptibilities due to which tthey are easily repelled by the magnets.

In case of eye system which acts as protective shield from particulate air pollutants can also be used as a video recorder. Here a small wireless camera is equipped on top of the eye frame which records the video as soon as the user switch it on. With the help of the transmitter present in wireless camera it transmits the video directly to the user mobile which is being received with the help of the receiver present in the user mobile.

3.3 HARDWARE REQUIRED

Heat sensors	Thermocouple
Microphone	CMM-3312AT-44308-TR
Opamp	741
Resistors	47KΩ,4.7KΩ,101Ω,1OKΩ
Capacitors	1nF,0.22µF
2 Way mechanical switch	
Magnet	
Wireless camera	SIKVIO HD 1080P

IV. EXPERIMENTAL RESULTS

4.1 OUTPUT OF EAR SYSTEM (for zero noise)

INPUT	OUTPUT	
35HZ	35HZ (180 degree phase shifted)	
100HZ	100HZ (180 degree phase shifted)	
9KHZ	9KHZ (180 degree phase shifted)	
14.8KHZ	14.8 KHZ (180 degree phase shifted)	
20KHZ	20KHZ (180 degree phase shifted)	

4.2 OUTPUT OF EAR SYSTEM (partial noise)

INPUT	OUTPUT
35HZ	35KHZ (90 degree phase shifted)
100HZ	100HZ (90 degree phase shifted)
9KHZ	9KHZ (90 degree phase shifted)
14.8KHZ	14.8 KHZ (90 degree phase shifted)
20KHZ	20KHZ (90 degree phase shifted)

As the magnet exhibits magnetic field it will made even more stronger by providing voltage with the help of thermocouple sensor . It repels the gases like co2,so2,nitric oxides successfully allowing the air free from pollutants to breathe. 1080P resolution wireless camera records the video and sends it to the user mobile . It sends a maximum storage of 2.4ghz video.

V. CONCLUSION

This prototype replaces the huge machinery required to control the air and noise pollution with a portable setup. It also contains power supply which is continuous there by reducing the necessity to renew the power supply. Also it is user friendly where the user is free to choose his comfort with respect to ear system of having zero or partial noise environment around him. Recording video is made simple by a switch which enables the wireless camera to record the video and with the help of transmitter present in the camera data is transmitted to near by resources like mobile etc, where this transmitted data is received by the receiver present in the mobile and can further referred. With all these uses E-Glasses is made as portable one stop solution for all the issues.

VI. ACKNOWLEDGEMENT

We feel it is our duty to acknowledge the help rendered to us by various persons. With immense pleasure, we express our sincere gratitude, regards and thanks to our project guide Prof. Shrikant S Tangade, Assistant professor, School of Electronics and Communication Engineering, REVA University, Bengaluru for providing us with enough technical guidance, motivation and all the support needed throughout the course of our project work. We can never forget his valuable guidance and timely suggestion given to us.

We thank Dr.Rajashekhar C. Biradar, Director, School of Electronics and Communication, REVA University, Bengaluru for extending his full support and co-operation.

VII. REFERENCES

[1] Matthias sperber,Martin Klinkigt, "Handwriting Reconstruction for a camera pen using Random dot pattern", 12th International Conference on Frontiers in Handwriting Recognition,2010.

[2]Yang Yu ; XiaohuiDuan ; Shuaiqi Wang ; Bingli Jiao,"The design and implementation of bluetooth video surveillance devices",presented at 3rd International Congress on Image and Signal Processing,2010.

[3] Lukas Ruge ; Bashar Altakrouri ; Andreas Schrader,"SoundOfTheCity - Continuous noise monitoring for a healthy city",presented at IEEE International Conference on Pervasive Computing and Communications Workshops (PERCOM Workshops),2013.

[4]TheofylaktosPieri ; Michalis P. Michaelides,"Air pollution monitoring in lemesos using a wireless sensor network",presented at 18th Mediterranean Electrotechnical Conference (MELECON),2016.

[5] PiyushPatil, "Smart IOT based system for vehicle noise and pollution monitoring", presented at the International Conference on Trends in Electronics and Informatics(ICEI),2017.

[6] Arnab Kumar Saha,SachetSircar,PriyashaChatterjee, "A raspberry pie controlled cloud based air and sound pollution monitoring system with temperature and humidity sensing",presented at IEEE 8th Annual Computing and Communication Workshop and Conference(CCWC),2018.