2nd National Conference on Recent Innovation in Engineering, Science, Humanities and Management
REVA University, Yelahanka, Bangalore, (India)
29th-30th March 2019 www.conferenceworld.in ISBN : 978-93-87793-79-8

Horizontal and Vertical Line adherent, guiding with weight lifting robot

Subham Kumar[1], Sheshadri N[1] , Warsha Balani[2]
School of ECE,REVA University

ABSTRACT
Since the inception of computers, automation and robotictechnologies have been utilized to create consumer products that increase life quality. We aim to create something that follows and utilizes the same. To carry forward on the same lines we are building the following robot carrier that aims to utilize such technology to solve another common issue like carrying heavy items.This is going to be beneficial in many various industries and companies. Apart from that it also covers being a Line follower robot .The line follower robot is a basic robot that follows a precise path indicated by a line having some particular width. It covers monochromatic path and lines. The line follower robot needs mechanical organization of the chassis body. The robot direction of motion hang on the two sensors outputs. Whenever robot travels away from its track it is detected by the IR sensor. It also detects any break in the path and obstacles. It can be beneficial and of great importance in defense and other such applications.

Keywords: Line follower,weight lifting,Arduino UNO, Microcontroller, embedded programming

I. INTRODUCTION

Robots are electromechanical equipment having ability to perform tasks or actions on some given electronic programming. [1]An example of this is the automated robot vacuum cleaner, which has become increasingly common across the world. Line follower robots have the ability to follow a line very accurately using onboard hardwired control circuit.[2]The development of science and technology has led to more complex machine development. In order to develop a constant and suitable fast line following robot proper study and accurate model regarding electronics and steering mechanism is very much necessary. [1]Two motors are used for governing wheel's motion. There are many practical presentations of a line follower which containautomatic cars running on roads with embedded magnets enabling them; guidance system for industrial robots moving on shop floor etc.[6] The Following Robot Carrier aims to utilize such technology to solve another common issue like carrying heavy items. There are many issues associated with carrying heavy items, ranging from health concerns to simply being a nuisance. The robot therefore aims to eliminate such problems by being a helpful electromechanical machine that can carry almost any kind of item whilst following the user in an accurate and unobtrusive manner. [3]Adding to this it can also accurately follows lines. Being in white lines on black background or vice versa. The robot effortlessly also deals with breaks in lines and obstacles. This advanced machine will be a boon the commercial industry.[4]

1.1 CONTRIBUTION

- Although this robot would be useful for people of all ages, this project's main demographic is the elderly and those with physical disabilities.
- Apart from that it also covers being a Line follower robot .The line follower robot is a basic robot which follows a specific path which is indicated by a line having some particular width. The line follower robot needs a mechanical arrangement of the chassis for its working.
- Assume that the robot is a two wheel robotic vehicle with a specified castor wheel. The two IR sensors are mounted on the robot facing towards the Earth. When robot is tested for working on the fixed path, it follows the path by detecting the line based on its algorithms.The direction in which the Robot moves depends on the motions of the two sensors outputs.
- When the two sensors are on the line of path the functioning of the robot begins.The robot moves forward. If the left sensor detects and moves away from the designated line, the robot moves towards right.
- Similarly, if right sensor detects and moves away from the path or designated line, robot moves towards its left. In casethe robot moves away from its path it is detected by the IR sensor.

- For the prototyping of the robot, features such as obstacle avoidance will be excluded, and the main focus will be on optimizing the way in which the robot follows the user.
- Specifically, the robot should be able to travel in the same path behind the user at a constant distance that is far enough not to affect their walking. This requires the robot to have to speed up and change direction accordingly.

II. OBJECTIVE

There is an increasing need to make this world a more habitable place for the elderly and the less privileged . To make this happen it is important to make viable utilization of the time and effort put into something creative and unexplored.A considerable amount of motivation and perseverance is required to carry out the project with utmost dedication and make it successful. This motivation is gained by the use and profitability of the project. The Follower Robot can be used in driver less car system with some added features like obstacle detection. Its application can be seen in industries as well as in the defense of the country. The robot must be equipped to act I in situations where a line is not present that can be followed. Even for breaks in the line, the robot should be able to make appropriate decisions. Implementation of such sensors is also in place that if some obstacle comes then it changes its direction. It can also be employed as an industrial automated equipment carrier. Further it can be used in entertainment and small household applications. Tour guides in museums and other similar applications. Keeping these motives in mind we had the following objectives for the Robot built.

- To built the robot which is used to carry heavyweight for the disabled or for the elderly.
- The visionless or disabled can also be helped by the same. It canbe achieved by having a stand sustained by the robot.
- It can also be utilized in other places useful for the same purpose such as large storerooms and supermarkets.It can also be used for commercial purposes it is used as a line follower which can classify different line designs using IR sensors.
- The provisions of the same can be varied and adjusted according to different needs.
- The robot is also skilled of following a different subject weather human being or not enabling speed changes and distance.
- The variations in the walking speed and distance need to be noted and breaks in the lines should also not be noted.
- Any obstacle present should also be noted and undertaken accordingly.

III. LITERATURE SURVEY

Ref.	Review Content	Year
1	A mathematical model of the electromechanical model of the vehicle and its surroundings is generated It working is tested in different simulation, and then applied to a robot. In this the author was unable to pass a few stimulated tests. He designed conditions which were not always met. The Robot now made satisfies those tests and conditions.	2008
2	In the working together of a visual serving system and a kinematic model for the robot is used. The robot is based on technical solution. The Robot deals with various factors which involve different working systems which was not done previously.	2012
3	Literature regarding the PIC microcontroller was found in the book “Programming and Customizing the PIC Microcontroller” which was written by Myke Predko. The author here did not include all the necessary factors which were involved in the working of the Robot in cases where the line was broken or an obstacle was seen. We have managed to cover those areas of fault as well.	2009

ISBN : 978-93-87793-79-8

4	The book titled A programmer for the PIC microcontroller was of great help and an indispensable tool helping me to gain knowledge and experiment with the algorithms and code rather than blindly copy code from the net.	2017
5	The book on Arduino Uno also helped to learn all the ports and their working. It was difficult to gain a working hand as it was not practically mentioned the book. The author did not include many examples. After several trial and error we were able to decipher it and implement it accordingly	2011
6	The book called Infrared Detectors by Antonio Rogalski as helped a great deal in understanding the working of the IR Sensors. Even though the author uses old IR sensors as it was easy to relate them to the newer versions.	2007

IV. PROPOSED WORK

4.1 Working of robot

The robot has many features which are helpful and does many useful tasks. To complete the objectives the robot works in various phases and modules. In Fig 1 we can see that

1. The Battery is connected to the sensor array and the micro controller IC.
2. The sensor array sends the analog information to the LM324.
3. This in turn sends binary instructions to the Microcontroller array.
4. Finally this information is received by the Motor Driver which operates the various motors.

The specific working is as follows:

1. ATmega8 microcontroller is an AVR family microcontroller. It is an 8 bit microcontroller with 23 programmable pins.
2. The DC motors of the robot are connected to the controller using a motor driver IC. We can see that the output of the controller is maximum 5v, and hence it cannot drive and operate the motors. So, to amplify this voltage motor driver.
3. L293D can amplify up to 36v.The driver IC which has 16 pins. Out of these 2, 7, 10, 15 are the input pins and are connected to the PD0-PD3 pins of microcontroller.16 pin is connected to 12v.This voltage drives the motors.
4. IR sensor consists of IR transmitter and IR receiver on a board. When the Robot is in motion and is moving on a black line, IR rays are continuously absorbed by the black surface and there is no reflected ray making output high.

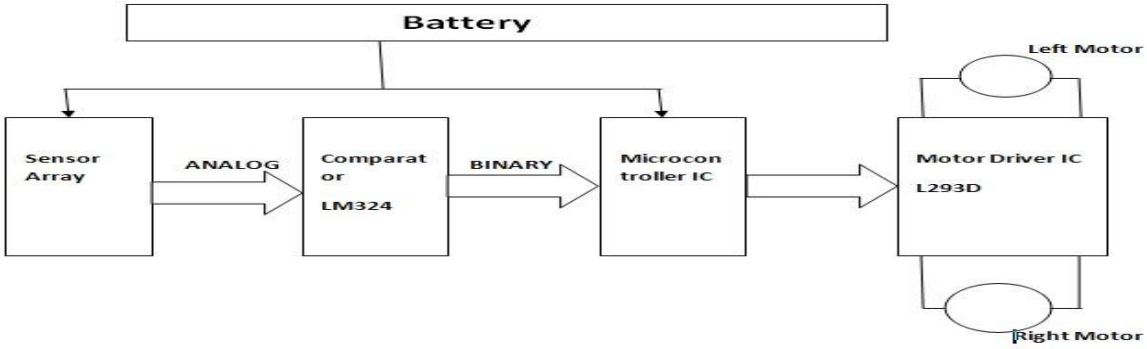

Fig 1:Block diagram of proposed Robot

4.2 THE HARDWARE SETUP

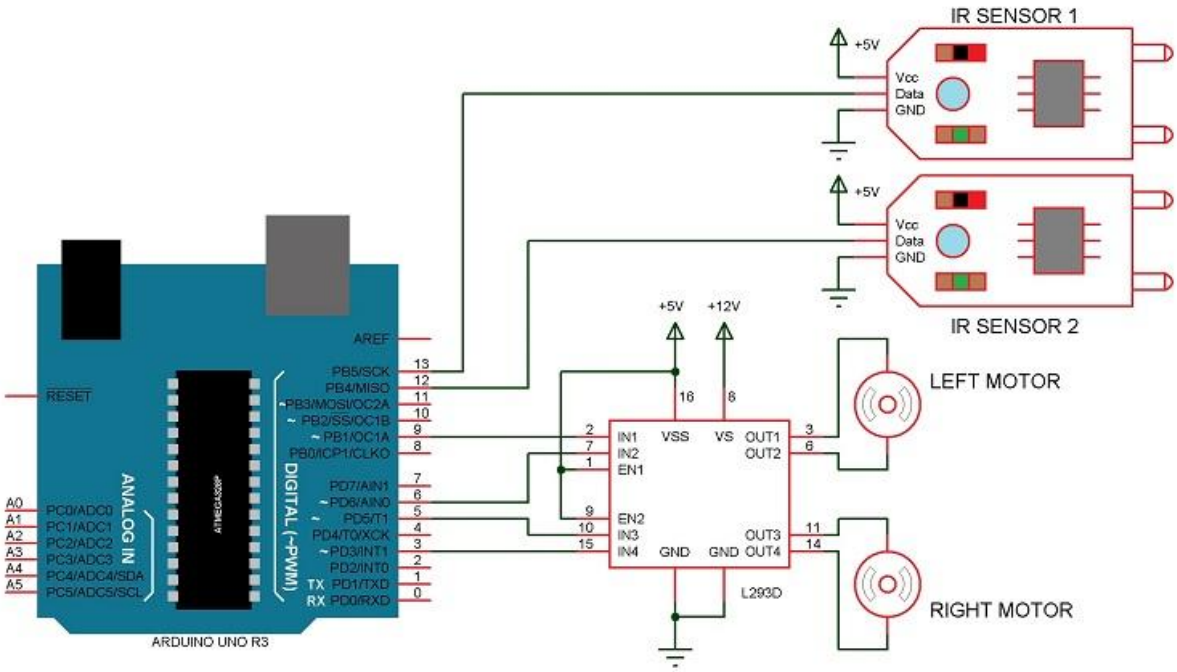

Fig 2: Hardware setup of proposed Robot

The Arduino UNO which is used in our robot is an open source microcontroller board. The board is enabled has sets of digital and analog input/output pins that may be interfaced to various expansion boards and other circuits. As we can see in the Fig 2,

The board has 14 digital pins and also 6 analog pins, and programmable with the Arduino IDE via a type B USB cable. The Arduino is used to operate and control the IR sensors. From the Arduino UNO pin 12 and 13 are connected to IR sensor 1 and 2 respectively. Further pin 9, 6, 5 and 3 are connected to the input ports of motor driver L293D. From the motor driver outputs are connected to the left and right motors respectively. This connections will help to guide the motors in the appropriate directions. Apart from this it is also used to operate the driver motor for the forward and backward movement of the robot.

V. HARDWARE AND SOFTWARE REQUIREMENTS

HARDWARE REQUIREMENT	SOFTWARE REQUIREMENT
1. Robot chassis 2. 9V DC motors 3. Motor driver L293D 4. Two infrared sensors 5. 9V DC power supply 6. Two wheels 7. One castor 8. Intel Edison, which is used as a Controller 9. Arduino UNO	1. Embedded C

VI. CONCLUSION

This Follower Carrier Robot took a lot of effort and time to become a success. There were a lot of challenges that were faced on the road to completion. The programming of the Arduino UNO was one of them. The smaller finer details took longer to code and there were many errors in the compilation of the code. The placement of the carrier compartment was also a challenge. This was a major factor since the model had to be light and concise. It also had to be easily mobile. The placement of all the components in a precise and space saving manner was also a major challenge.

All these challenges were overcome one by one in its due time. The code was tested many times and using trial and error. With the help of research and rigorous testing the code was compiled to perfection. The weight carrying compartment was eventually designed to perfection. This was done in such a way that the size, speed and mobility of the Robot was not affected. The design of the robot helped in this factor greatly. Once this component was fixed, the other parts and components fell into place perfectly. The robot was aesthetic and completely functional.

The robot can be enhanced in various ways in the future.The robot can also be made to decide if the line is white on black background or vice versa. The motor control could be modified to steer a convectional vehicle, and not require a differential steering system. The robot could be further made better to be a four wheel drive. Extra sensors can also be attached to allow the robot to detect obstacles if any, and if possible bypass it and get back to the line. Moreover, it must also be capable predicting the line beyond the obstacle. Speed control could also be incorporated. Position and distance sensing devices could also be built in which can transmit information to a mother station, which would be use full in tracking a lost carrier.

REFERENCES

[1]. Bajestani, S.E.M., Vosoughinia, A., “Technical Report of Building a Line Follower Robot” International Conference on Electronics and Information Engineering (ICEIE 2010), vol 1, pp v1-1 v1-5, 2010.
[2]. Bong. D.M.K, “Automatic Guided Vehicle System” in Department of Electrical Engineering, University Tenega Nasional, Malaysia, P.41, 2004.
[3]. Colak, I., Yildirim, D.,”Evolving a Line Following Robot to use in shopping centers for entertainment”,Industrial Electronics, 2009. IECON ’09. 35th Annual Conference of IEEE, pp.3803 3807, 3-5 Nov. 2009.
[4]. Engin, M., & Engin, D. (2012, September). Path planning of line follower robot. In *2012 5th European DSP*

Education *and Research Conference (EDERC)* (pp. 1-5). IEEE.
[5].Osorio, R., Romero, J. A., Peña, M., & López-Juárez, I. (2006). Inteligent line follower mini-robot system. International Journal of Computers, Communications & Control, 1(2), 73-83.
[6]. Bajestani, S. E. M., & Vosoughinia, A. (2010, August). Technical report of building a line follower robot. In 2010 International Conference on Electronics and Information Engineering (Vol. 1, pp. V1-1). IEEE.
[7]. Colak, I., & Yildirim, D. (2009, November). Evolving a Line Following Robot to use in shopping centers for entertainment. In 2009 35th Annual Conference of IEEE Industrial Electronics(pp. 3803-3807). IEEE.
[8]. Hasan, K. M., Al-Nahid, A., Reza, K. J., Khatun, S., & Basar, M. R. (2013, April). Sensor based autonomous color line follower robot with obstacle avoidance. In 2013 IEEE Business Engineering and Industrial Applications Colloquium (BEIAC)(pp. 598-603). IEEE.
[9]. Kaiser, F., Islam, S., Imran, W., Khan, K. H., & Islam, K. M. A. (2014, April). Line follower robot: Fabrication and accuracy measurement by data acquisition. In 2014 International Conference on Electrical Engineering and Information & Communication Technology (pp. 1-6). IEEE.
[10]. Pakdaman, M., Sanaatiyan, M. M., & Ghahroudi, M. R. (2010, February). A line follower robot from design to implementation: Technical issues and problems. In 2010 The 2nd International Conference on Computer and Automation Engineering (ICCAE) (Vol. 1, pp. 5-9). IEEE.
[11]. Hasan, K. M., & Al Mamun, A. (2012, May). Implementation of autonomous line follower robot. In 2012 International Conference on Informatics, Electronics & Vision (ICIEV) (pp. 865-869). IEEE.
[12]. Punetha, D., Kumar, N., & Mehta, V. (2013). Development and applications of line following robot based health care management system. International Journal of Advanced Research in Computer Engineering & Technology (IJARCET), 2(8), 2446-2450.