NUMERICAL ANALYSIS OF BUCKLING AND POST BUCKLING BEHAVIOR OF SINGLE T-STIFFENED CFRP PANEL WITH RUN OUT

Dudekula Mahabjohn[1], Dr. Smt. G. Prasanthi[2]

[1]PG Research Scholar, Product Design, Dept. of Mechanical Engineering,
JNTUACEA, Ananthapuramu - 515002, A.P., India
[2]Professor of Mechanical Engineering, Director, Faculty Development and IQAC,
JNTUA, Ananthapuramu - 515002, A.P., India

ABSTRACT:

The present work study will be carried out to investigate the buckling and post-buckling behavior of T-Stiffened Carbon Fiber Reinforced Polymer (CFRP) composite panel with run out region under uniform in-plane axial compressive loading. Finite element study has been carried out using commercial finite element software ABAQUS 6.13 version. A 4-node doubly curved thin or thick conventional shell, reduced integration, hourglass control and finite membrane strains (S4R), having 6 degree of freedom per node is chosen for performing the buckling and post buckling analysis of composite panels. Conventional shell elements are used for analyzing moderately thick shell structures and well suited for large rotation and large strain non linear applications. Comparing to continuum shell (solid elements) which provides similar result, the conventional shell elements has great advantage in saving the computational effort and time. Finite element study using Eigen buckling followed by non linear analysis to obtain the buckling behavior of CFRP panel including mode shapes, critical buckling load, end shortening (axial displacement) and out of plane deflection.

Keywords**:** *Buckling behavior, Eigen approach, T-shaped run out stiffened composite panel, Mode shapes, Post buckling analysis*

1. INTRODUCTION

Composite is a material which is the constituent of matrix and reinforcement and is usually defined as the combination of two or more materials which gives high strength and stiffness when compared with individual material properties. The industrial use of composite materials has continued to increase steadily over the last three decades with important developments in the aerospace, wind energy, automotive, marine and sports industries. Fiber materials with high strength and stiffness, low density like boron, carbon and aramid, were commercialized to meet the higher performance challenges of space exploration and air travel in the 1960s and 1970s.the following figure1 shows the importance of composites in aircraft and automobile industries

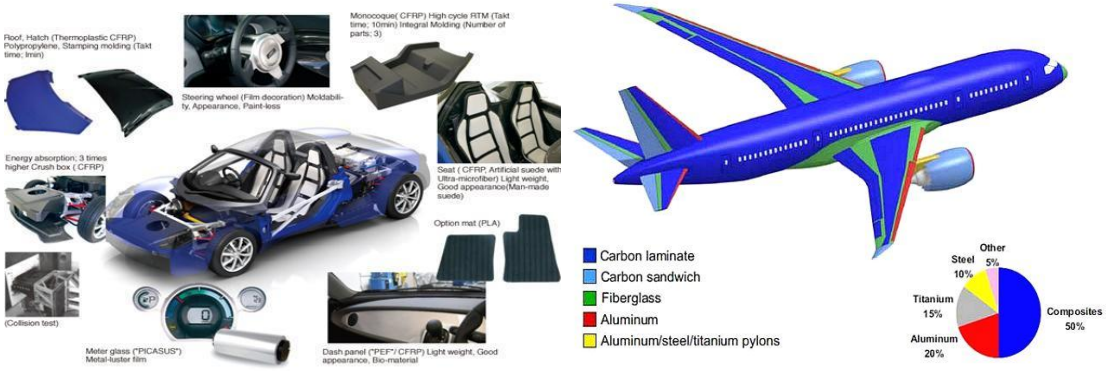

(a) (b)

Fig1: (a) use of composite materials in automobile industries and (b) use of composite materials in aerospace industries

Since 1970s the use of composite materials has become common for primary structure members in aircrafts. The shear webs of main structural components, such as spars and ribs in aircraft wings or wind blades, are made of composite laminates in a large number of cases. Composites also offer superior fatigue performance as well as lower life cycle costs achievable by taking advantage of their potential low maintenance. Composite laminates can be tailored in stiffness or strength, by varying the fiber directions, which permits a high level of optimization

1.1CFRP LAMINATES

The carbon reinforced plastics (CFRP) are very strong materials and light in weight which is mainly used in the manufacturing of countless products. CFRP has its application in aerospace, automotive, sports and lots of high end products that require low weight and stiffness. The manufacturing cost of a CFRP materials are bit higher when compared with glass and aramid fibers. In order to optimize the cost, the volume should be made less for the composite structures which can be done by reducing the thickness on approximation.

In the context of aircrafts the CFRP materials are majorly used in aircraft structures because it is having an interesting property high strength to weight ratio. So the structures manufactured with CFRP will be having less weight than the metal counter parts while maintaining the same load carrying capacity. Aircraft manufacturers such as airbus and Boeing has started using of cfrp panels for manufacturing of fuselage and wing parts .the maintenance of parts had been reduced due to the CFRP.

1.2STIFFENERS

The principal form of airframe construction is characterized by a thin skin acting as a membrane and forming an aerodynamic surface which is stabilized in compression by the use of stiffeners. Stiffeners perform various functions in an aircrafts. These functions include transferring bending loads in skin panels, stiffening and strengthening the skin panels so that panels don't buckle under compressive loading. Stiffeners are classified

according to its cross sectional shape. They are named as alphabets.”L”,”Z”,”I”,”J”,”HAT”,”T”,”C” are examples of stiffeners.

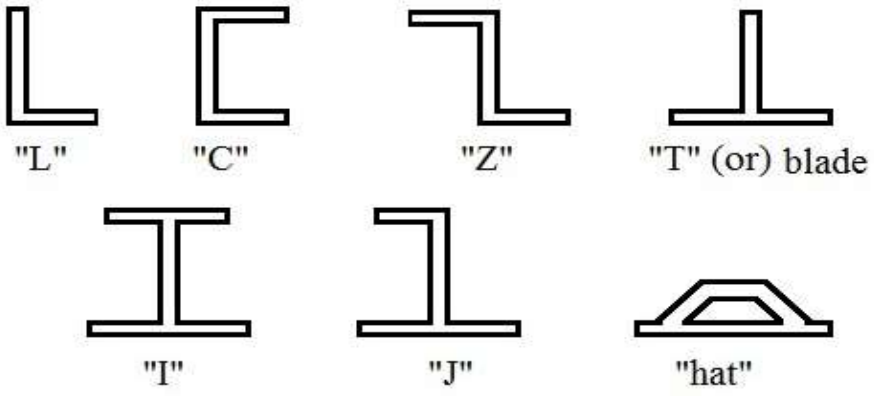

Fig 2: shapes of a stiffener

1.3 BUCKLING

Buckling is simply the geometrical instability of a structure and characterized by sudden sideways failure of the structural member subjected to high compressive stress, where the compressive stress at the point of failure is lesser than the ultimate compressive strength of the material.Since CFRP has high strength to weight ratio, the thickness of the structure tends to be lower which increases the risk of buckling failure. Stiffener is used to make these more reinforced against buckling. They increase the moment of inertia of the cross section. Particular emphasis on identifying the failure mechanisms which lead to the catastrophic failure.

lot of experimental and analytical work has been undertaken for such structures, emphasizing the vulnerability of co-cured and co-bonded stiffened structures to through-thickness stresses .Recent trends have led to the development of thicker skinned stiffened structures to be used on the heavily loaded regions of the wing’s primary structure, and the problem of through-thickness stresses is even more substantial in critical regions such as stiffener run outs.

1.4 STIFFENER RUNOUTS

The run out regions are inevitable consequence of the necessity to terminate stiffeners at cutouts or other structural features, such as rib, which interrupt the stiffener load path. As the stiffeners are terminated, the loads through it must be transferred to the skin and hence the design of this termination region becomes significant. The loss in cross sectional area due to the terminating stiffener is sometimes compensated for by a corresponding increase in the skin thickness where by the skin thickness is ramped up as the stiffener is run out.

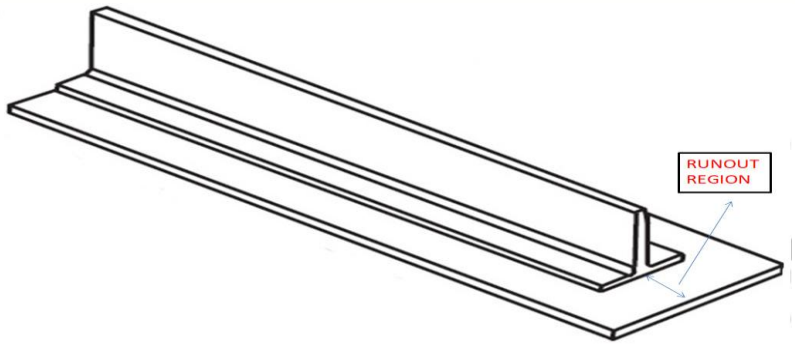

Fig 3: T-Stiffened composite panel with run out region

1.5 LITERATURE SURVEY

Andrea faggiani and falzon worked on a numerical and experimental investigation of the buckling behavior and failure mode of the different stiffener run out specimens. They gave initial buckling behavior of T-Stiffened panel with tapered run out. In this paper, researcher's team applied a symmetry boundary conditions and a displacement boundary condition at the loaded run out end in order to replicate the displacement-controlled loading. The end opposite the run out region had all nodes restrained in all degrees of freedom to replicate the clamped boundary condition. The author validated his experimental result with a numerical prediction based upon a quadratic nominal stress criterion and used for mixed-mode damage initiation and a Benzeggagh-Kenane Fracture energy based criterion for mixed mode damage evolution and computer software ABAQUS. They suggested that Stiffener run outs, regions where stiffeners are terminated, are highly susceptible to deboning due to the high through-thickness stresses that develop in this region. The authors used two different specimens with different layers, where both the specimens were made from unidirectional carbon-fiber composite AS4/8852.

Specimen1 with the stacking sequences (45/−45/0/90/02/−45/45/02/90/02/45/−45/0) s for skin, [0/90/02/−45/45/04/−45/45/02/90/03/90/0] for Stiffener (per half section) and [0/90/02] for Closing plies, had an overall test length of 440 mm and a width of120 mm. The length of the stiffener was 400 mm, leaving an unsupported skin section of 40 mm. The stiffener blade was tapered linearly over a distance of 200 mm, to a height of 10.0 mm above the skin at the edge of the run out. The skin had a thickness of 8.0 mm

Specimen2 with (45/−45/02/90/02/45/−45/03/45/−45/0/90/02/45/−45/0/90/02/45/−45)s for skin, (−45/02/45/02/90/02/45/0/90/02/90/0/−45/02/90/02/45/02/−452/45) for Stiffener (Per half section) was characterized by a thicker skin, of 13.0 mm, and corresponding increases in stiffener dimensions to 500mm. The specimen had a length of 540 mm and a width of 200 mm, with an unsupported skin length of 40 mm. The stiffener web tapered over a longer distance of 400 mm.linear voltage differential transducers (LVDTs) was used to measure displacements. The compression tests were carried out in a hyper stiff 250-T compression-testing machine. The first specimen, characterized by a thinner skin, showed sudden crack propagation leading to collapse, while the second specimen, with a thicker skin, had initially unstable crack growth followed by stable crack growth. The FE models were able to capture both phenomena and predict many aspects of the specimens' behavior as well as the failure modes.

1.6 OBJECTIVE

A review of literature shows that a lot of work has been done on buckling and post buckling analysis of laminated at composite plates either by experimental , analytical or numerical based method 4(FEM) like ABAQUS, STAGS or ANSYS. However, very little work exists on the post-buckling analysis of curved composite plates. Hence the present study was taken up.

The objective of this thesis is to numerically investigate the buckling and post-buckling response of curved CFRP panel under axial compression. In order to investigate the buckling and post-buckling response of the specimen, a finite element model of T-stiffened composite panel with run out was made and numerical analysis has to be carried out with the finite element commercial software Abaqus-CAE 2017.

2. MODELLING:

The T-Stiffened panel is modeled using conventional shell element method in which the thickness is significally smaller than the other dimensions. The thickness is defined in the property module when creating the section. For solid elements the continuum shell elements are assigned and abaqus will determine the thickness from the geometry of the part. In context of modeling the continuum shell look like three dimensional continuum solids, but their consecutive behavior is similar to conventional shell elements. Conventional shell elements have only displacement and rotational degrees of freedom, while continuum shell elements have only displacement degrees of freedom.

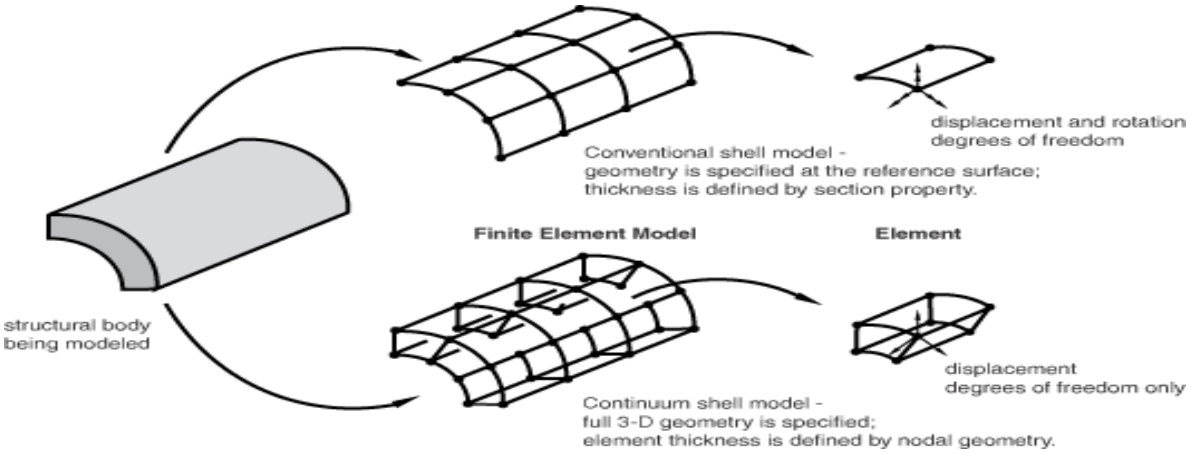

Fig 4: conventional shell vs. continuum shell element modeling

2.1 PLATE MODELLING

The geometry having 300mm length and 150mm width and 1.76mm thickness are considered and Finite element studies are carried out for 8 layered Carbon Fiber Reinforced Polymer (CFRP) rectangular flat plates as shown in Fig 5.

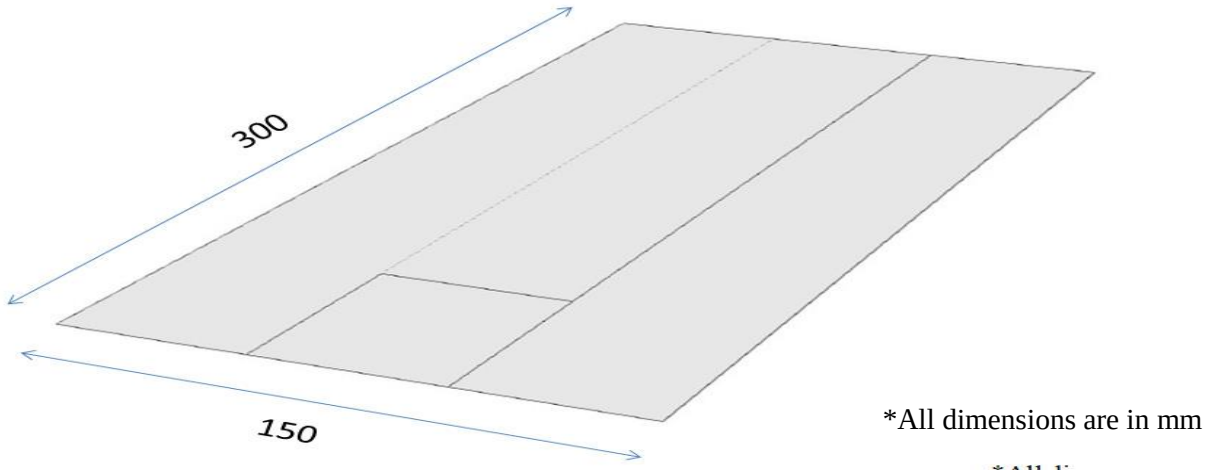

Fig5: conventional shell elemental rectangular plate

The thickness of each layer is 0.22mm.Now the panel behaves as the main panel in the components like aircrafts. The structure of skin parts are flat and curved shape. A flat rectangular panel is used which is suitable for this requirement

2.2 STIFFENER MODELLING

Stiffeners acts like a supporters for the high cross sectioned rectangular composite panels which will increase the stiffness, strength and buckling load capacity for the base skin plate. Stiffened panel with run out region is considered for numerical analysis. The 10 layered thickness of carbon fiber reinforced polymer is considered and the geometry for the stiffener is 250mm length and 50 mm width 25mm height as shown in the figure6.

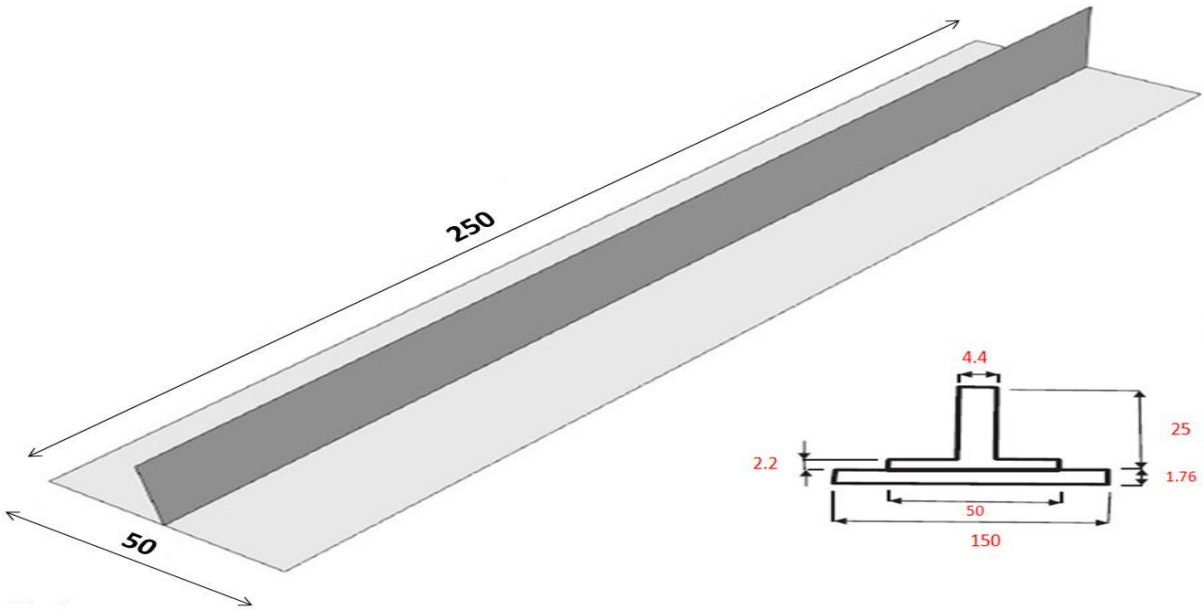

*All dimensions are in mm

Fig6:Stiffener cross section

2.3ASSEMBLY

The individually modeled parts are assembled by creating a instance in between the parts by using instance tool. Translate and rotate tools will help us to assemble the total part in a required position and at specified distance and path .Surface-surface interaction tool is used for creating constraints in between the parts which acts like a bonding agent while applying loads. The following figure7 shows the total assembly of a T-stiffened panel with run out region.

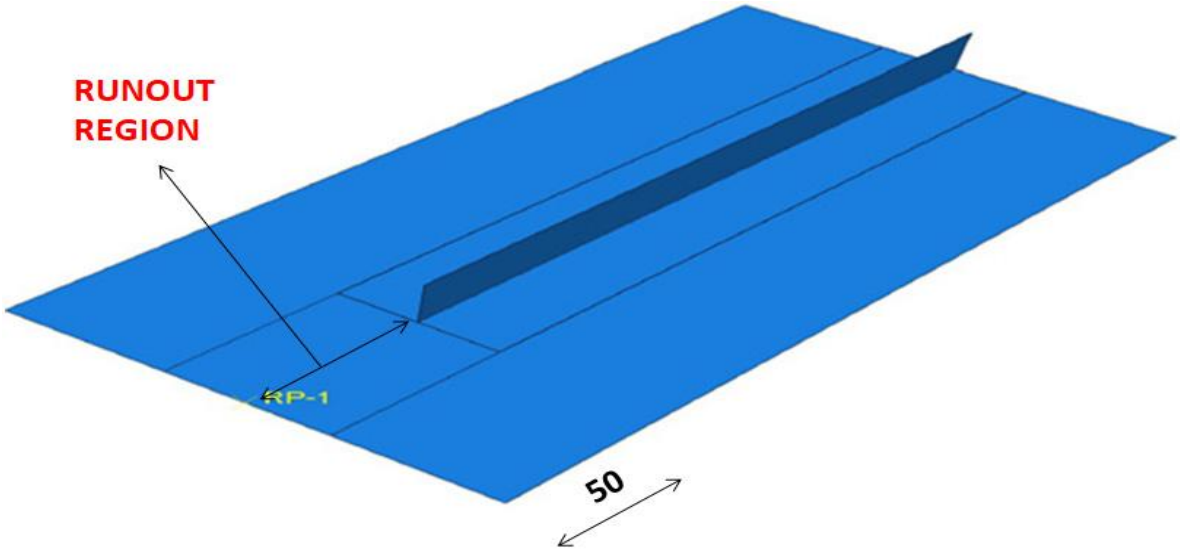

Fig 7: Assembly ***All dimensions are in mm**

2.4 MATERIAL PROPERTIES

Table-1 shows orthotropic material properties of UD-CFRP laminate. For the current study, CFRP consists of unidirectional carbon fiber mat as the reinforcement and ARALDITE® CY 230-1 IN epoxy resin mixed with ARADUR® HY 951 IN hardener is used as the matrix [10]

Table-1: Material properties of UD-CFRP laminate

Material properties		Value
Longitudinal modulus	E_{11}	105.68Gpa
Transverse modulus	E_{22}	4.64Gpa
Transverse modulus	E_{33}	4.64Gpa
In-plane shear modulus	G_{12}	3.34Gpa
Out-plane shear modulus	G_{13}	3.34Gpa
In-plane shear modulus	G_{23}	1.55Gpa
In-plane Poisson's ratio	ν_{12}	0.36
In-plane Poisson's ratio	ν_{13}	0.36
Out-plane Poisson's ratio	ν_{23}	0.49

2.5 LAYUP SEQUENCE

In the composite layup, the stacking sequence of each layer is initialized. The critical buckling load values are going to alter for various stacking sequences which further raise an issue in failure of the part by delamination.so, quasi isotropic layup sequence was chosen to reduce the delamination and for obtaining better load carrying capacity. The following symmetrical ordered stacking sequence is shown in below Table-2.

Table 2: Lay-up count and stacking sequences

Composite lay-up	Part	No. of plies	Stacking sequence
Conventional Shell	skin	8	(45/90/-45/0)s
Conventional shell	Stiffener per half section	5	(45/90/-45/0/45)

2.6 MESHING

For meshing an assembly S4R (A 4-node doubly curved thin or thick shell, reduced integration, hourglass control, finite membrane strains) shell element tool was used. Sweep technique used to assign mesh control for the curved object. For the stiffened panel, the element size 0.5mmwas chosen for the whole assembly where 75000 elements had been generated on stiffener and 180000 elements on the skin which are shown in the figure 8.

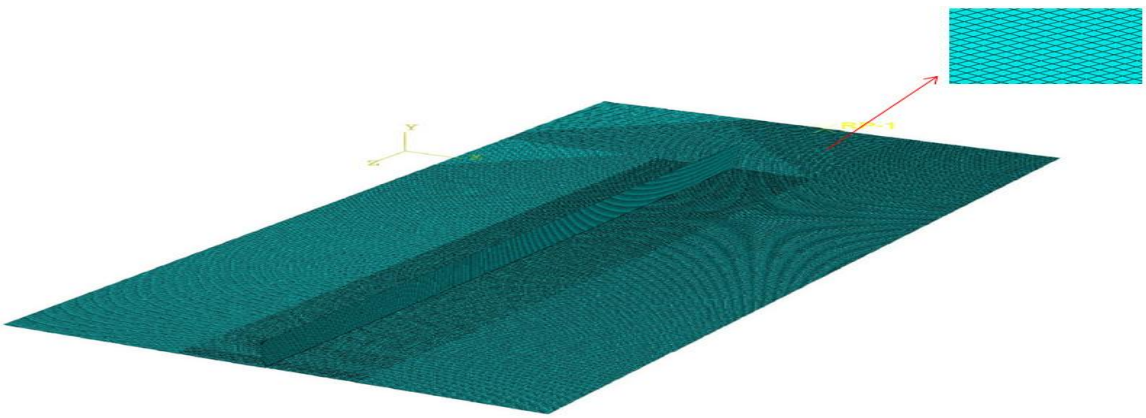

Fig8: Isometric view of an S4R meshed element

2.7 LOADING AND BOUNDARY CONDITIONS

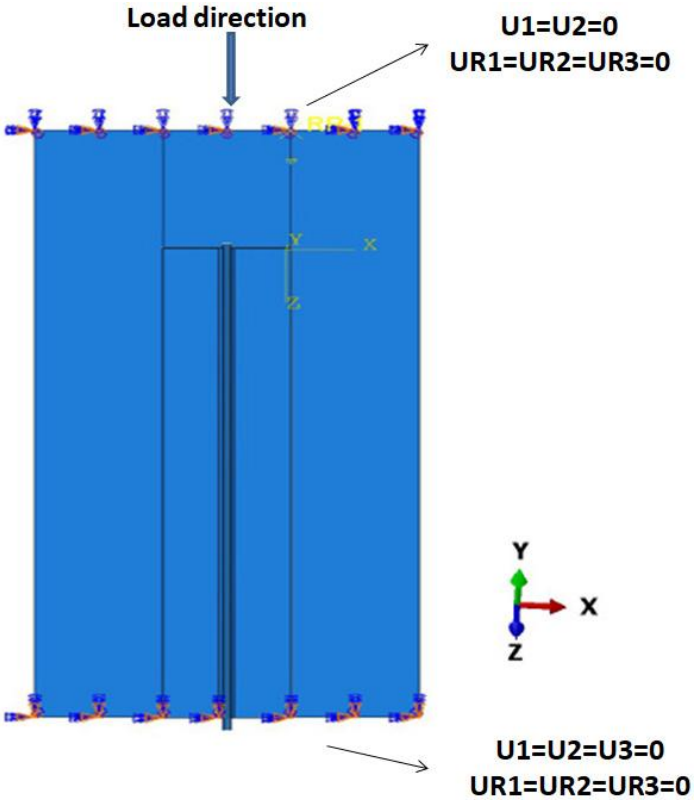

Fig.9: Loading and boundary conditions

Simply supported boundary conditions are applied on load end leaving out of plane i.e,z-axis direction in order to calculate the out of plane displacement and axial displacement. At The fixed end ie, No load side, clamped boundary conditions are applied as shown in Fig.9. A group of nodes are selected to form as a set by using Set Manager. A master node is created for that selected nodes on the load direction. By using Equation Constraint in Constraint Manager which will be in Interaction module the set of nodes are joined together to master node, so that a concentrated load is applied on master node which will distribute the load uniformly over the surface. The force of 1N is applied on to the master node and then simulation is run. The critical buckling load value is calculated by multiplying the first obtained Eigen value.

3. RESULTS AND DISCUSSION:

3.1 EIGEN BUCKLING:

Linear buckling is the most basic form of buckling analysis in FEA. The Eigen buckling analysis produces the critical buckling loads and the corresponding mode shapes for all the specimens. Eigen value buckling analysis predicts the theoretical buckling strength of an ideal linear elastic structure. In this analysis non-linearity and particular initial geometric imperfections have not considered.

3.1.1 MODE SHAPES

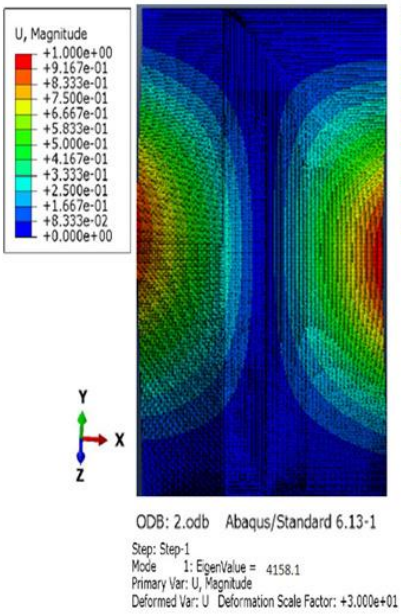

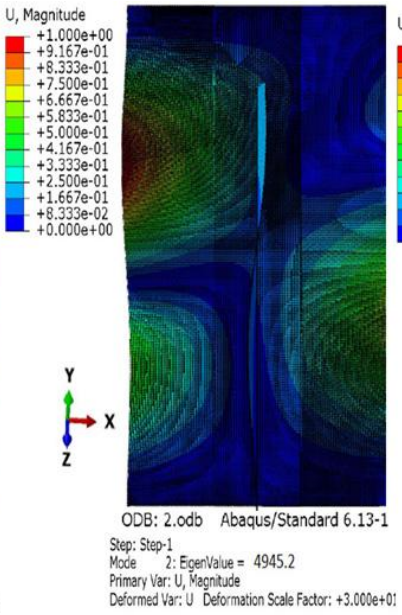

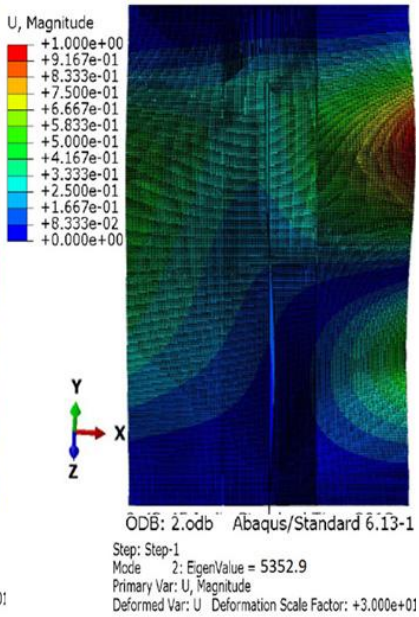

Fig 10: eigen value 1 : 4158.1 **Fig 11: eigen value 2 : 4945.2** **Fig 12: eigen value 3 : 5352.9**

The above mode shapes represents the buckling behavior of the part in symmetry .the deformation is clearly predicted through color indications which shows the buckling behavior and let us make to know about the critical buckling load value considering magnitude **U** as primary variable.

Buckling load from FEA analysis = 4158.1N

Critical Buckling load = First Eigen value * applied load in N

3.2 POST BUCKLING ANALYSIS

Non-linear analysis (post buckling) becomes necessary when the stiffness of the part changes under its operating conditions. So to study the non-linearity of the buckled panel non-linear analysis is carried out to find out the changes in axial displacement. As the initial imperfection is needed to run the analysis, the first Eigen buckling value is given as load with a scaling factor of 10% thickness of the plate. In the post buckling regime, the strain displacement relationship is non-linear and requires non-linear solvers to solve the resulting finite element matrix equations. After post buckling process the axial displacement and out of plane displacement deformations modes are observed which are shown below in 3.2.1 and 3.2.2.

3.2.1 AXIAL DISPLACEMENT MODE SHAPES

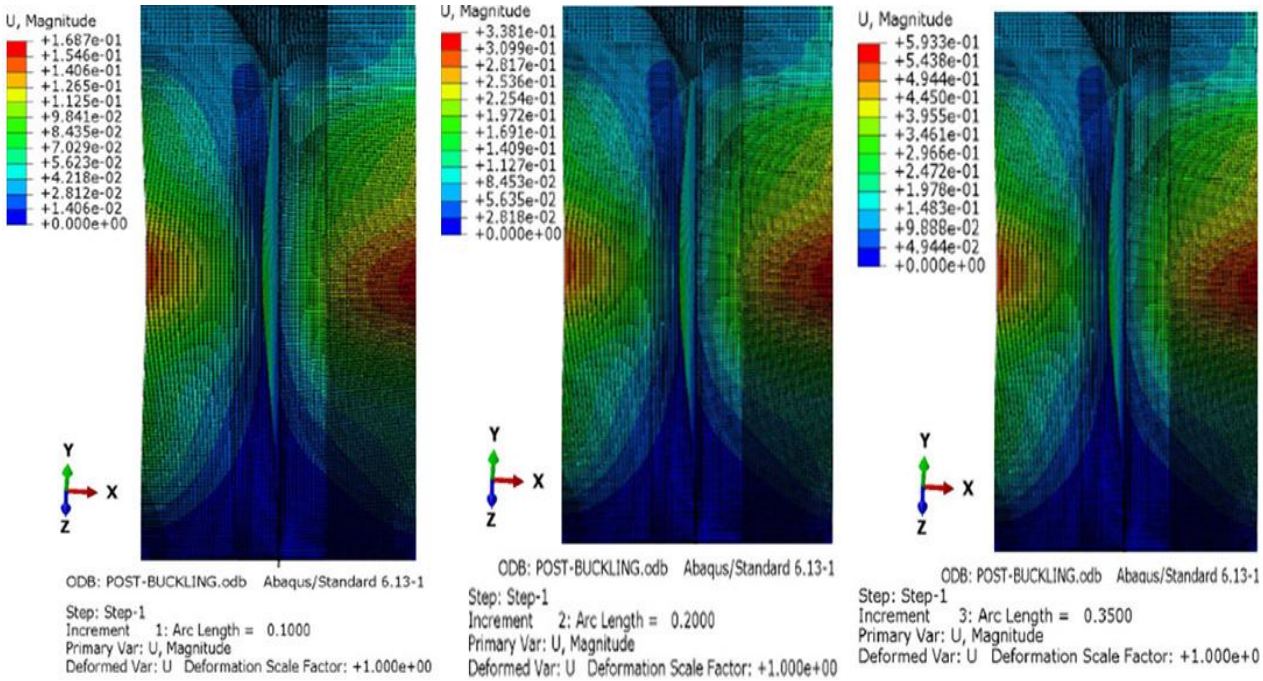

Fig 13: Increment 1 :415.81N Fig 14: Increment 2 :831.62N Fig 15: Increment 3 :1455.335N

3.2.2 OUT-OF-PLANE DEFLECTION MODE SHAPES

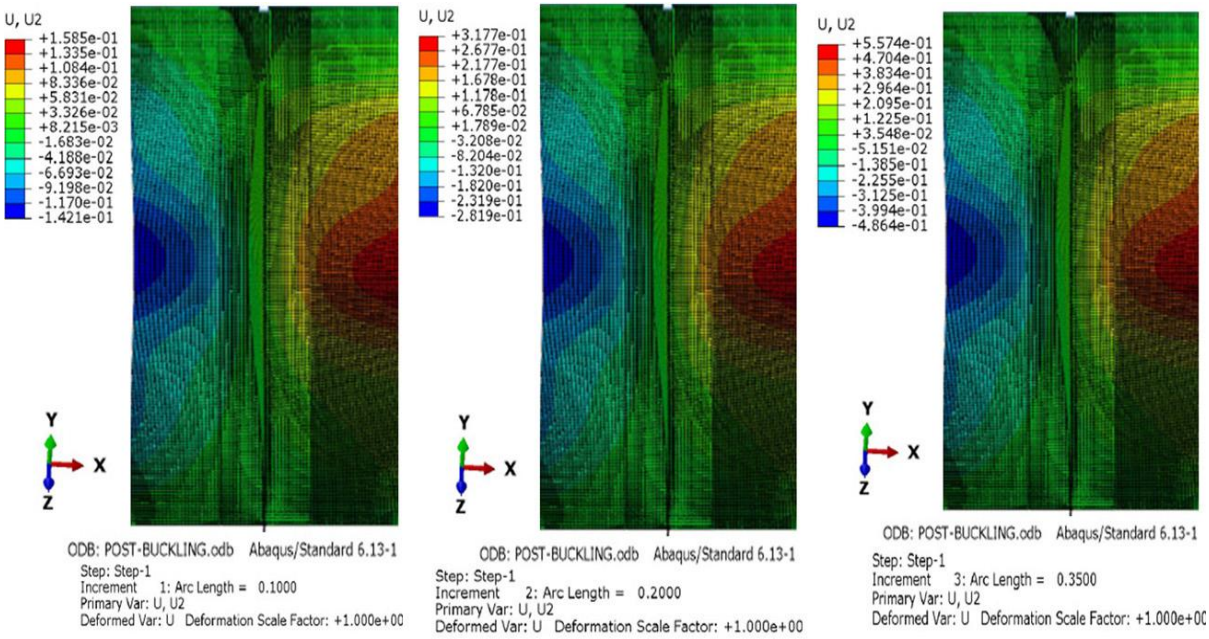

Fig 16: Increment 1 :415.81N Fig 17: Increment 2 :831.62N Fig 18: Increment 3 :1455.335N

The above figures in 3.2.1 and 3.2.2 show the non linear behavior of the composite panel. The major deformation is seen at the run out region. We can see the significant reduction in axial stiffness of the composite

panel.Rik's method is used for post buckling analysis. In this analysis, initial geometric imperfection and non-linearity is considered. The imperfection file had been generated by Eigen value analysis

3.3 Graphs

3.3.1 LOAD VS. END SHORTENING

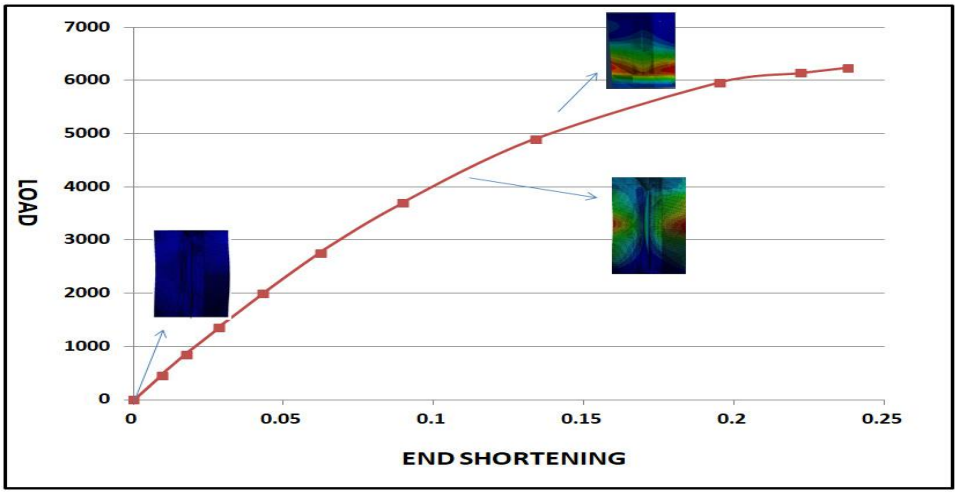

Fig19: Load vs. End shortening curve

The above figure11 shows the graph between load and end shortening obtained through FEA process. The end shortening is calculated by extracting the Y-displacement node at which force is applied at every time step. The resultant force from the first Eigen value with the unit load value is applied on each time step and is calculated by multiplying with the time. This plot represents end shortening (axial displacement) in longitudinal direction with respect to applied axial compressive load.

3.3.2LOAD VS OUT OF PLANE DISPLACEMENT

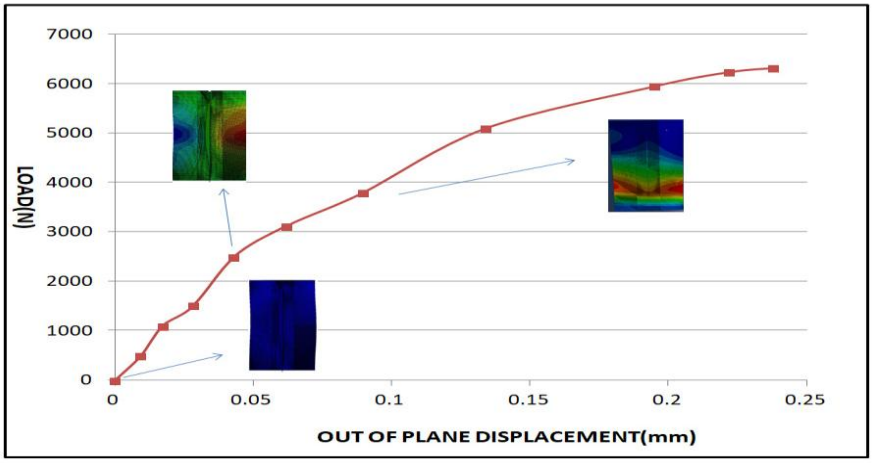

Fig20: Load vs. Out Of Plane displacement curve

The above figure12 shows the graph between load and out of plane displacement. The out-of-plane displacement is calculated by extracting the z-displacement of the node where the plane is deflected in perpendicular to the load direction where load is applied in y-direction at every time step.

4. CONCLUSION

Finite element model was created for single T-Stiffened panel with run out. The linear and non-linear analysis was carried out numerically using abaqus software and buckling behavior of the composite panel had been observed which was clearly explained in this paper. The load vs. end shortening and load vs. out of plane displacement graphs are also clearly shown through plots. The T-stiffened panel without run out for the considered stacking sequence was buckled at 10000N.so the main objective of this analysis made me to find out the buckling behavior of the same panel with run out region for various run out dimensions and to notice the changes in out of plane displacements and axial displacements for the run out region. The good results are achieved for 50mm run out region. It was clearly observed that the buckling behavior starts near the run out region and continued to edges of the plate. The buckling load of the panel gives 4100N.the non linearity of the panel holds up to 6000N.

5. FUTURE STUDY:

The future scope on this run out model will be challenging .The delamination and the damage analysis can be observed and buckling load value can be improved by considering various run out regions and tapering the edges of the run out region. The experimental study can be carried out for real time observations for this run out structure for better understanding.

REFERENCES

[1].Christos Kassapoglou. *Design and Analysis of Composite Structures: With Applications* to Aerospace Structures, 2nd Edition, Aerospace series, May 2013

[2].http://arch5541.wordpress/2013/01/08/the_great_metal_tube_inthe_sky

[3].Robert M. Jones; *Mechanics of Composite Materials*, Second edition, Taylor & Francis Group, 1999

[4].https://patents.google.com/patent/US8720825/en, Composite stiffeners for aerospace vehicles

[5] Faggiani A, Falzon BG. *Numerical analysis of stiffener run out sections*. Appl Compos Mater 2007; 14:145–58.

[6] S. Psarras a,⇑, S.T. Pinho a, B.G. Falzon b. *Investigating the use of compliant webs in the damage-tolerant design of stiffener run-outs*

[7].Chia, C.Y., Prabhakara, M.K., *A General Mode Approach to Nonlinear Flexural Vibrations of Laminated Rectangular Plates. Journal of Applied Mechanics – Transactions of the ASME, Volume 45*, 1978, Page no: 623-628

[8].Commercial finite element software ABAQUS/CAE 6.13 version for Finite Element Analysis (FEA).

[9].Abaqus 6.13 Documentation; Abaqus/CAE Analysis User's Guide http://dsk.ippt.pan.pl/docs / Abaqus/v6.13/index.html

[10].Naresh Reddy Kolanu, Gangadharan Raju, M. Ramji, *Experimental and numerical studies on the buckling and post-buckling behavior of single blade-stiffened CFRP panels Composite Structures 196*, 2018, Page no: 135–154