# EFFECT OF TRAINING SEASON & PHYSICAL FITNESS AND TECHNIQUES OF FOOTBALL PLAYER

**Naveen Karwasra**

*Assistant Professor of Phy. Edu, C.R.M. Jat College, Hisar*

## I.INTRODUCTION:

Man's performance in sport or any other field depends on his movement oriented behaviour – all these actions which can be noted by other with or without the aid of instruments and which have their roots in the biological phenomenon. In other words the performance of an individual is the result of the integrated and harmonious functioning of the several dynamic process of the body which are physiological, psychological, psycho-physiological and are biochemical in nature. Along with these, the environmental conditions such as climate, altitude, temperature seasons etc. may also have their effect on performance of an individual. Further, there are some "performance variables" which are those conditions that supposedly affect performance i.e. they may temporarily depress or elevate performance and are quite transient in nature such as fatigue, warm-up, placebo effect, superstitious behaviour, pain tolerance, over load effect etc. Genetics, childhood experience, personal goals, dieteis, type of training, competition and other interactions lead to the state of excellence in performance.

For centuries, man has been looking at the universe and trying to unreveal its mysteries and understand it's working. On one hand this endeavour has filled him with a sense of awe and wonder and on other, he has developed the philosophical and scientific faculty to study the phenomenon of cause and effect relationship. Till today man has only decreased his ignorance rather than accumulate knowledge. In fact man the scientist has not yet been able to understand and analyse himself in relation and with regard to overall changing environment.

Out of the aforesaid factors, the biological phenomenon is the foremost which fluctuates periodically and is quite prone to the diurnal variation which may be interpreted as the circadian rhythms or biological clock or daily rhythms.

The natural environment is a fundamental factor in the development of living being and it influences the normal function of the body. Similarly, the environmental temperature is an important factor in which training and competition takes place. The human efficiency and working capacity mainly depends upon the thermal environment of his surroundings. When a person is suddenly exposed from cold to hot climate, or vice-versa, he is not only affected physically but also physiologically. Similarly, when an athlete is exposed to different climatic conditions during his participation, it will have considerable effect on his performance depending on the severity of the climate. Hence it is very important to consider environmental aspect of competition in training and also its effects on various physiological responses.

Football has come a long way and has a storied history as the world's most popular sport. The London Football Association was established in 1863 and developed the rules of modern football, based on the earlier style of just using the feet to advance the ball. This became known as association football, and through history, to soccer football and soccer. England and Scotland played the first international match in 1872. The Federation International de Football Association (FIFA), the international governing body of football, was established in 1904. In 1908, football was sanctioned as an Olympic sport, and in 1930, the first World Cup was held in Montevideo, Uruguay with 13 countries competing.

Physical qualities are basic requirement for participating in all kinds of games and sports. It is essential that all should learn to attain and appreciate a high degree of physical development so that foundation of skill and sports and other activities are engaged with the confidence and pleasure. Success comes when the pupil chooses to participate in vigorous physical activities.

Modern soccer is a vigorous fast game requiring accelerating sprints, rough tackling, power in kicking and endurance to sustain skillful play for 90 minutes.

**STATEMENT OF THE PROBLEM:** The purpose of this study was to determine the effect of training season and session on physical fitness and techniques of football player

## II.DELIMITATION

1. The study was delimited to college level 80 female Soccer players of 18-22 years of Hisar District.
2. The study was delimited to the seasonal variations, only two seasons, namely winter and summer season were considered and the data was collected in these seasons only.
3. The study was delimited to two training sessions, namely morning and evening and the data was collected in these sessions only.
4. The study was further delimited to the selective motor components i.e. Speed, Response Time, Agility, Cardio-respiratory endurance.

## III.LIMITATION

1. On the days of testing the aptitude of the subjects may influence the results of the study. This was considered as the limitations of the study.
2. No motivational factors were applied during investigation. The difference in performance of the subjects dire lack of motivation was recognized as another limitation of the study.

## IV.HYPOTHESIS

On the basis of different research findings, experts opinion and scholar's own understanding of the problem, it was hypothesized that the session and training season will significantly affect the performance of the subjects on selected motor components as well as Soccer performance.

## V.DEFINITION AND EXPLANATION OF THE TERMS

**Training Session**

In this study, the session referred to the time at which the data was collected the day i.e. morning and evening.

**Training Season**

The training season in this study referred to the summer and winter seasons of the year with the sole aim of studying the effect of these seasons, especially with regard to variation in temperature.

**Speed**

Speed may be defined as "rapidity with which successive movements of the same kind are performed.

According to Borrow and McGree it is the capacity of the individual to perform successive movements of the same pattern at the fastest rate.

While speed would appear to be an innate quality, it can be improved by practice of the co-ordination movements and by learning some techniques. Speed is based partially on neuromuscular action and partly on inherited factors which operate anatomically, biomechanically and psychologically. It is generally agreed that speed is difficult to develop by training. there are five types of speed abilities:

1. Reaction Ability: It is the ability to react effectively and quickly to a signal.
2. Movement Speed: It is the ability to do a single movement in minimum of time.
3. Acceleration Ability: It is ability to achieve high speed of locomotion from a stationary position or from a slow moving position.
4. Locomotors Ability: It is ability to maintain maximum speed of locomotion for maximum possible duration or distance.
5. Speed Endurance: It is ability to do sports movements with high speed under conditions of fatigue.

Here in this study, speed was measured in terms of ability of an individual to cover 50 mtr. distance in the shortest possible time.

**Agility**

Agility is the ability to change the body's position, and requires a combination of balance, coordination, speed, reflexes, and strength. In sports, agility is described in terms of response to an opposing player, moving target, as seen in field sports and racket sports.

Sheppard and Young (2006) define agility as "a rapid whole body movement with change of velocity or direction in response to a stimulus."

Agility is the ability to change body position or direction of the body rapidly. This ability is measured with running tests that require the subject to turn or start and stop. Agility is also influenced by balance, coordination, position of center of gravity, running speed and skill. Agility can be improved by practicing specifically for a sport but also by improving the specific individual elements of speed, balance, power and co-ordination.

Here in this study, agility was measured in terms of ability of an individual to cover 4 x 10 mtr (Shuttle run) distance in the shortest possible time.

**Response Time**

Response time is the combination of reaction time and movement and also refers to as speed of movement (Philips and Hornal).

In this study, response time referred to the ability to react and move quickly and accurately towards indicated direction and attempts to run as quickly as possible in minimum time.

**Cardio-respiratory Endurance**

Endurance is the ability to continue or persist in strenuous task involving large muscle group for long period of time.

Endurance is characterized by moderate contraction of large muscle groups for relatively periods of time, during which maximal adjustments of cardio-respiratory system are necessary[1].

Endurance is very important is sportsman continue the activity for long time endurance also helps to improve the ability to recover quickly from training and competition load.

Endurance is of 4 types and classified accordingly to the duration of activities:

1. **Speed Endurance:** The Cyclic activities which last up to 45 seconds came under speed endurance. These activities are done with high speed under the condition of fatigue.
2. **Short Time Endurance**: The cyclic activities lasting from about 45 seconds to 2 minutes needs this ability.
3. **Medium Time Endurance**: This ability is required to cyclic activities lasting from 2-11 minutes.

**Long Time Endurance:** The long time endurance is required for activities lasting for more than 11 minutes.

Here in this study, the cardio-respiratory endurance referred to the ability of the lungs, heart and lower limb muscles to sustain the load of 1 mile run.

## VI.SIGNIFICANCE OF THE STUDY

1. The findings of the study with regards to the effects of seasonal variation and time of day on selected motor components and Soccer performance would determine which time of day with respect to a season is more conductive to give best performance.
2. The findings of this study would add to the existing literature, with regard to the training implications of time of day and seasonal variation effects.
3. The findings of this study would assist the coaches and physical education teachers in planning training schedules for their athletes/students in their respective sports or events considering the particular season and time of day.

## VII.REVIEW OF LITERATURE:

An attempt was made by the scholar to go through the literature available at the libraries of Laksnmibai National University of Physical Education, Gwalior, KU Kurukshetra, Panjab University, Chandigarh, Punjabi University, Patiala, MD University, Rohtak and CDLU Sirsa and the relevant studies have been briefly reviewed in this chapter.

Capen (1950)[2] experimented on systematic weight training to see the effect on strength, athletic power, muscular and cardio-vascular endurance. Two groups of students were used in this study. Group A was attending weight training class while group B participated in conditioning class. Both the group did exercise twice a week for 11 weeks. The groups were tested for muscular endurance, muscular strength, cardio respiratory endurance and athletic power prior to and after 11 weeks of training. Analysis of the data revealed that there was no significant difference between the two in muscular endurance as would probably be expected group of program gave greater general improvement in muscular strength than group B. In power events, however group B had an initial test that average higher than group A. Yet group A improved significantly more in these speed events than did group B.

Christopher A. hopper *et al* (1952)[3] viewed that learning a broad base of specific skill lead to becoming an effective all round player. Player, who concentrates on development of a few specific skills, may not be effective player in game.

Water Winter Bootom (1954)[4] has commented that coaching is not a matter of pouring out knowledge. It implies teaching the use of the right knowledge at the right time and there is a considerable technique to be acquired in putting this knowledge across. A player gets far more satisfaction from doing something than from hearing about it or watching it. He will see for himself each improvement he makes. But he is made immediately aware of his progress by such practical instruction and situation, he must not be allowed too much or the next skill too quickly.

Wright[5] (1959) conducted a test on factors influencing diurnal variation of strength grip, 35 subjects were involved in his study. Grip strength measured at intervals through the day by an independent observer. Three grips were measured with each hand. There was a marked increase in strength of grip from 6.00 a.m. to 9.00 a.m. or 10.00 a.m., some time a more gradual increase from then to 12.00 Noon or 1.00 p.m. and a greater from then at night.

---

2 Edward K Capen, The effect of systematic weight training on power, strength and endurance. Research Quarterly-21 (May 1950): 83

3 Christopher A. Hopper and Michael S. David: "Coaching Soccer Effectively" The American Coaching Effectiveness Program Level-1. Human Kinetics Books

4 Winter Bootom W, Soccer Coaching" The Naldrett Press Ltd. in association with the World Work, 1958.

5 Verma Wright, "Factors influencing Diurnal Variation of Strength Grip", Research Quarterly 30 (March 1959): 110-113.

Gorostiaga, E. M. (2002)[6] divided soccer players in two groups performed soccer and explosive-strength training (N = 10) or soccer training alone (control; N = 11) for 11 weeks. The explosive-strength group significantly improved the low portion of the load-vertical jumping curve, the amount of serum testosterone, and in the first four weeks, 5-m sprint training. Endurance adaptation was not compromised. Explosive-strength training combined with soccer training improved neuromuscular performance of explosive activities.

Springer (2002)[7] conducted study on Effects of Training Volume on Hormones and Mood in Basketball Players. In his study mood and basal hormone levels were measured before and after a 4-month training period in 20 professional basketball players on 2 different teams. Training volume was daily quantified by intensities, showing that Team 1 trained nearly twofold the volume of Team 2. Apart from the lack of differences between teams in anthropometric and physical variables, results showed mood improvements in the total sample without differences between teams. However, cortisol levels decreased in Team 1 and increased in Team 2, while the free testosterone–cortisol ratio, free testosterone, prolactin, and luteinizing hormone did not show significant changes. Changes in cortisol were positively related to depression and negatively related to training volume. Results suggest that differences exist in sensitivity and/or timing of both psychological and hormonal responses to 2 given volumes of training.

The aim of the study of Satyanarayana (2002)[8] was to determine the effect of sand training on selective motor abilities of junior volleyball players. Investigation was done on 24 junior players. Subjects were divided in two groups each comprising of 12 subjects. One was experimental group and other was control group. Standing vertical jump, standing broad jump, approach and jump reach, court speed test, coordination test (92 meters agility) and 30 mts. sprint test were administered at the beginning and end of 4 weeks sand and general training program. On the basis of results, it was found that sand training on experimental group improved jumping abilities with S. Muniroglu (2006)[9] in his research aims to determine the effects of a six weeks pre-season preparation training period on the physical and physiological characteristics of a football team in the Turkish Professional First Division League. Twenty football players participated in this study. Their ages were 22.2 ± 3.41 years old, and they had 12.4 ± 4.2 years of training. Their height was 178.9 ± 5.13 cm. (Table 1). The body weight, body fat percentage, flexibility, systolic/diastolic blood pressure, aerobic capacity, anaerobic power, vertical jump, and speed of these players were tested twice; once at the beginning of the six-weeks pre-season preparation training period and again at the end of the training period (Table 2). Research data was evaluated statistically with pair-t test at a significance level of ($p < 0.05$). There were some significant changes in weight, body fat percent, systolic/diastolic blood pressure, aerobic capacity, anaerobic power, and vertical jump. There were no any statistically significant changes in elasticity and speed.

---

6 Gorostiaga, EM, Izquierdo M, Ruesta M, Iribarren J, Gonzalez-Badillo JJ, Ibanez J, "Effects of Explosive Strength Training on Force Production, Sprint performance, Endurance and Serum Hormones in Soccer Players". Medicine and Science in Sports and Exercise, 34 (5), 704, 2002.

7 Springer (2002): International Journal of Sports Management, Volume 9, Number 4 October 2002 p. 263-273

8 M. Satyanarayana, BC Kaushal, B Singh, S Singh, J Singh and H Singh, Journal of Sports and Sports Sciences, Vol. 25 (3) : 42-46, 2002.

9 S Muniroglu, M Coz, "The Physical and Physiological Properties of Football Players from a Turkish Football League" The Sports Journal, 2006.

S. Muniroglu and M. Koz (2006)[10] in his research aims to determine the effects of a six weeks pre-season preparation training period on the physical and physiological characteristics of a football team in the Turkish Professional First Division League. Twenty football players participated in this study. Their ages were 22.2 ± 3.41 years old, and they had 12.4 ± 4.2 years of training. Their height was 178.9 ± 5.13 cm. The body weight, body fat percentage, flexibility, systolic/diastolic blood pressure, aerobic capacity, anaerobic power, vertical jump, and speed were tested twice; once at the beginning of the six-week pre-season preparation training period and again at the end of the training period. Research data was evaluated statistically with pair-'t' test at a significance level of ($p < 0.05$). There were some significant changes in weight, body fat percent, systolic/diastolic blood pressure, aerobic capacity, anaerobic power, and vertical jump. There were no any statistically significant changes in elasticity and speed.

**Selection of Subjects**

Eighty female Soccer players of Hisar district acted as subjects for the study. All eighty subjects were of college level. All players were members of the Soccer match practice group. These subjects were chosen in terms of purposive sample from the soccer match practice group. Their ages ranged from 18 to 22 years.

**Selection of Variables**

The following motor components were selected to see the effect of session and season variation since they seem to have close relationship with Soccer performance (playing ability).

These motor components were

1. Speed
2. Response Time
3. Agility
4. Cardio-respiratory Endurance

Along with these motor components the Mc Donald Soccer Skill Test was used to measure Soccer performance.

**Criterion Variables**

**Speed** : It was measured with 50 m Dash and was measured in 1/10th of second

**Response Time** : It was measured with Meter Rod Test.

**Agility** : It was measured with 4 x 10 Shuttle run

**Cardio-respiratory Endurance** : It was measured with Cooper's 12min Run/Walk test.

**Soccer Performance** : It was measured with Mc Donald Soccer Skill Test.

**Reliability of Data**

The reliability of data was ensured by establishing instrument reliability and reliability of tests as well as tester competency.

10 S Muniroglu and M Koz, The Sports Journal, Volume 9, Number 4, Fall 2006

**Instrument Reliability**

The stop watches, measuring tapes, response time scale and other required instruments were procured from reliable companies and the instruments used were available in the Laboratory of CDLU Sirsa and their calibrations were accepted as accurate enough of this study.

**Tester Competency and Reliability of Tests**

The tester competency was evaluated together with the reliability of tests. To determine the reliability of tests, the performance of eight subjects selected at random was recorded twice on the Soccer performance tests and selected motor components under identical conditions by the scholar. Pearson's Product Moment Correlation was computed between the two measures of each variable separately and these correlations (reliability coefficients) are shown in Table 1.

**TABLE 1**

**RELATIVE COEFFICIENTS OF TEST RETEST SCORES**

| S.No. | Tests | Coefficient of Reliability |
|---|---|---|
| 1. | Speed | 0.90 |
| 2. | Response Time | 0.87 |
| 3. | Agility | 0.89 |
| 4. | Cardio-respiratory Endurance | 0.87 |
| 5. | Soccer Performance Test | |
| | Mc Donald Soccer Test | (validity 0.63 to 0.94) |

From the test-retest coefficient of correlation (Table 1) it was obvious that the tester reliability was significantly high, establishing the competency of the scholar to administer the tests. The correlation coefficients also indicated the reliability of the tests selected, as very high correlations were obtained when the tests were reported.

**Collection of Data**

Data were collected by administration of standard tests for selected motor components speed, response time, agility, cardio-respiratory endurance, Mc Donald Soccer Test. The tests were administered after giving them a good warm up of same duration and of same sequence every time and in both the seasons. The subjects were tested two times in both the seasons in the following way.

The timing for summer and winter were the same

Between 7.00 a.m. to 8.00 a.m.

Between 4.00 p.m. to 5.00 p.m.

**Administration of Test**

**50 m Dash**

**Purpose**

To measure the Speed of the subject.

**Equipment**

Clapper and stop watches.

**Procedure**

Five subjects selected at random were started at a time with a clapper and they ran a distance of 50m. The time for each subject was recorded with the help of a stop watch.

**Scoring**

The time was recorded to the nearest 1/10th of a second. The actual distance of 50 yards was replaced by meters because of the fact that metric system is used in India.

**Response Time**

**Purpose**

To measure the speed of reaction time of foot in response to a visual stimulus.

**Equipment**

Meter rod, table or bench and wall space.

**Procedure**

The subject was asked to sit on table (bench) which is about one inch away from the wall with her shoes off. The subject positions her foot so that the ball of the foot is held about one inch from the wall with the heel resting on the table top about two inch from the table edge. The tester holds the meter rod near the wall so that it hands between the wall and the subject's foot with the base line of the timer opposite to the end of the big toe. The subject was asked to look at the concentration zone and to react as soon as the timer is dropped by pressing the timer stick against the wall with the ball of the subject's foot. Twenty trials were given in this test.

**Scoring**

The reaction time of each trial was recorded from the line just above the end of the big toe when the foot is pressing the stick to the wall. The best five trials were eliminated and the average of middle ten trials was taken as distance score. The distance score was converted into time square by using the following formula.

$$\text{Time} = \sqrt{\frac{2 \times \text{Distance of the scale falls}}{\text{Accelertion due to gravity}}}$$

**4 x 10 m Shuttle Run Test**

**Purpose**

To measure the agility of the subjects.

**Equipment**

Marking tape, Stop Watch and two blocks of wood.

**Procedure**

Two parallel lines were marked on the ground ten meters apart. For this test item the starting and finishing line were the same. Two wooden blocks were placed behind the restraining line. Each subject positioned himself

behind the starting line and on the preparatory command ready 'go' she ran to the opposite end line, picked up a block, ran back to the starting line, placed the block behind it, ran back and picked the second block and carried it across the starting line.

**Scoring**

The timing was clocked from the starting to the carrying of the second wooden block across the starting line to the nearest one tenth of a second.

**Cooper's 12 minute Run/Walk Test**

**Purpose**

To measure the cardio-respiratory endurance of the subjects.

**Equipment**

Stop Watch, whistle, distance markers, clapper, 400 m track.

**Procedure**

The test was conducted at the 400 m track of CCS HAU Hisar. The track was marked in segments of 25m and batch of ten students were started for the run of the sounding of a clapper by the time keeper. Scorer was assigned to each of the runner and keep number of laps completed out of the part of the lap run with in the stipulated period of 12 minutes.

**Scoring**

When the time keeper whistled at the competition 12 minutes, the scorers located the spot, reached by their respective subjects and recorded by their repetitive subjects and recorded the distance run correct to the nearest 25 metres.

**Mc Donald Soccer Test**

**Purpose**

To measure the Soccer playing ability of the subjects.

**Equipment**

Stop Watch, a Soccer Kickboard, three Soccer Balls and marking powder.

**Procedure**

The test field is prepared to administer the skill tests shown in figure. A 11½ feet high and 30 feet wide Kickboard was used for the test. Horizontal restructuring line was marked at a distance of 9 feet from the kick board. Another line was marked at a distance of 18 feet from the kickboard. One soccer ball was placed on the 9 feet restructuring line. Two extra were placed on the 18 feet line. The subject was instructed to make maximum number of kicks in 30 seconds by keeping the ball in his control while using any type of Kick and Ball Control Method. On the signal Ready 'Go'. The times started the stop watch and subject started kicking the stationary ball from or behind the restraining line and continues kicking the rebounding ball as rapidly as control permits until the 30 seconds time limit expires (indicated by the timer). In case, the ball fails to rebound sufficiently the subject has the option either to retrieve the same ball or to take of one of the extra balls with the help of either

hand or feet. After placing the retrieved or the extra ball just behind the 9 feet restructuring line, the subject continues kicking the ball again.

**Scoring**

The subject was given four 30 seconds attempts and the final test score was provided by the sum of kicks of the 4 best trials.

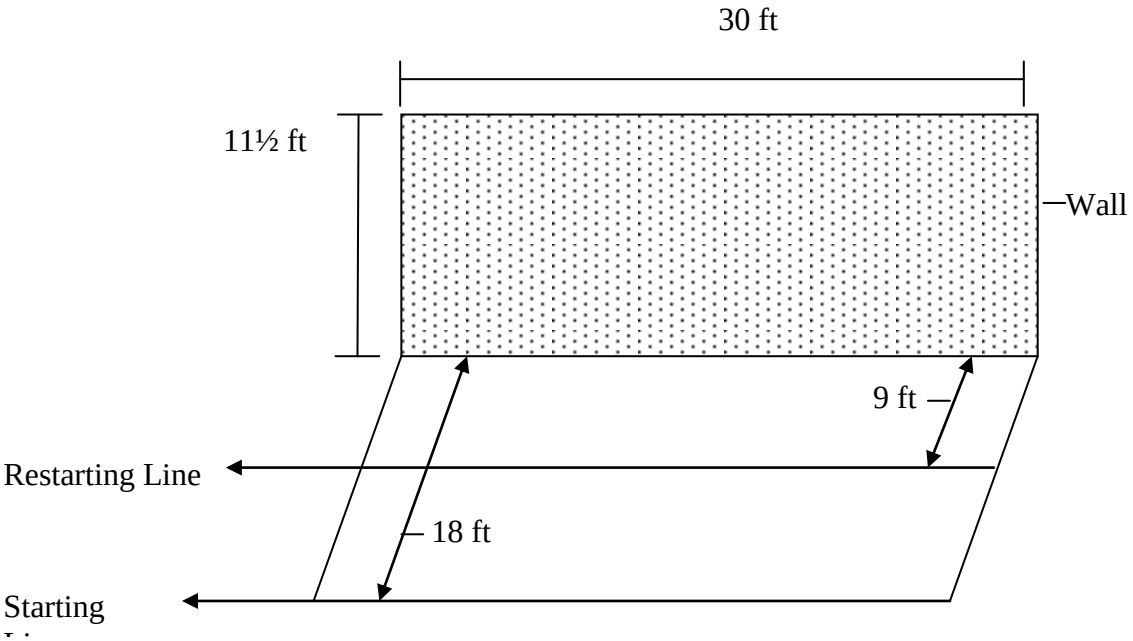


**Statistical Technique Employed to Analysis Data**

To analyse the effect of session and seasonal variation on selected motor components and soccer performance the two way analysis of variance was analysed[11].

To test the significance of the post-hoc difference between means, of any best significant Difference Test was applied. The hypothesis was tested at 0.5 level of significance[12].

## VIII.RESULT OF THE STUDY:

The analysis of the data revealed significant differences in the performance of selected motor components when compared for seasonal variations with the better performances observed in winter season, and with regard to the effect of time of day the motor components of seed and response time did not show significant differences in both the seasons whereas on the motor components of agility and cardio-respiratory endurance significantly better performance observed in the evening. Analysis of data with regard to the interaction effect of seasonal

11 H.Harrison Clark and David H Clark, Advanced Statistical Supplement to Research Process in Physical education, Recreation and Health (Englewood Cliffs, N.J.Prentice Hall Inc. 1972), p.20.

12 Ibid.

variation and time of day revealed overlapping results as the speed performances were not affected; agility performances were better in the morning in winter and in the evening in summer; the response time performances were better in the evening in winter and in the morning in summer; and the cardio-respiratory endurance performances were better at morning time during winter and in the evening during summer.

The analysis of the data pertaining to the effect of time of day and seasonal variation on soccer performance revealed that soccer performance was not significantly affected when measured on the Mc Donald Soccer skill test in both the seasons but the performances showed significant differences better in afternoon in winter and during in summer.

## IX.CONCLUSIONS:

On the basis of the findings and within the limitations of the study the following conclusions were drawn:

1. The performances on the selected motor components of agility, power, response time and cardio-respiratory endurance are prone to seasonal variation effects with better performances occurring in winter season.
2. The soccer performance as measured in the study was not affected due to seasonal variation.
3. The performances of the subject on motor components of speed and response time did not differ significantly when taken at different times of the day, however, the agility, and cardio-respiratory endurance of subjects showed significant variations with better performances recorded in the evening.
4. The soccer performances of subjects as measured by Mc Donald Soccer skill test show significant differences were observed.
5. The interaction effect of seasonal variations and time of the day exhibited overlapping results as the speed performances were not affected: agility performances were better in the morning in winter and the evening in winter and in the morning in summer, and cardio-respiratory endurance performances were better at morning time during winter and in the evening during summer.
6. The analysis of data pertaining to the effect of time of day and seasonal variation on soccer performance exhibited that soccer performance was not significantly affected when measured on the Mc Donald Soccer skill test in both seasons by the performance showed significant interaction effect was observed.

## RECOMMENDATIONS:

On the basis of conclusion drawn, the following recommendations have been made:

1. The competitions may be scheduled in winter season for the events where the performances are based on the selected motor components of agility, power, response time and cardio-respiratory endurance.
2. Recommendation No.1 and the other findings with regard to the interaction effect of seasonal variation and time of day may be utilized in the light of their training implications.
3. For the athletes trained in a particular temperature range and going to take part in different temperature range or seasonal variation, the need of adaptation is justified based on the findings of the study.
4. Same study may be conducted using soccer performance of actual games situation.
5. Same study may be repeated by employing a larger sample of subjects.

6. Similar study may be conducted by taking physiological variables and coordinative abilities in to consideration.

**BIBLIOGRAPHY :**

1. Robert N.Singer, Myths and Truths in Sports Psychology (New York: Harper and Row Publisher Inc, 1975), p.9
2. Edward L.Fox and Donald K.mathews, The Physiological basis of Physical Education and Athletics (Philadelphia: W.B. Saunders Company, 1976) :1-2
3. C.A. Wlakar et al, "Chronopharmocology and Chronotherapeutics", cited by Charles M. Winger et al, "Circadian Rhythms and Athletic Performance", Medicinal Sciences in Sports and Exercise 17 (October 1983) : 499.
4. Ravin E.Faria and Tamasa I.Elliold, "Biorhythm Patterns of Maximal aerobic Power of Females", The Journal of Sports Medicine and Physical Fitness 1(March 1980):81-86
5. Tommy Docharty, Better Football (New Delhi: Vision Books Pvt. Ltd, 1980) pp 110-120
6. Indira Gandhi' Message' – Abstract: International Congress of Sports Sciences (NSNIS Patiala, Nov. 1982
7. Carl E. Klafs and Daniel D. Aruteim, Modern Principles of Athletic Training. 2nd ed. (Saint Louis: The C.V. Mosbay Company, 1969, p. 50.
8. Arpad Csanadi, Training and Conditioning of soccer player: A Soccer Book Vol. 2 (Hungary: Athenacum Printing Hall Budapest, 1960) p.66
9. The Amrit Bazar Patrika, Calcutta, March 8, 1982, p. 8 col. 2
10. H. Harrison Clarke, Physical Fitness News Letter (Oregon: University of Regon, Dec. 1963), Series X No.4
11. Indira Gandhi' Message' – Abstract: International Congress of Sports Sciences (NSNIS Patiala, Nov. 1982