4th International Conference on Multidisciplinary Research
Osmania University Centre for International Program, Osmania University Campus, Hyderabad (India) (ICMR-2019) Conference World
2nd February 2019, www.conferenceworld.in ISBN:978-93-87793-67-5

Design and Analysis of Axial Gas Turbine Blisk

[1]Dr. Chirra Kesava Reddy, [2]Ch.Indira Priyadarsini,

[3]Dr.M.V.S.MuraliKrishna

[1]Assistant professor, Mechanical Engg. Dept., MGIT, Gandipet, Hyderabad

[2]Assistant professor Professor, Mechanical Engg. Dept., CBIT, Gandipet, Hyderabad

[3]Professor, Mechanical Engg. Dept., CBIT, Gandipet, Hyderabad

ABSTRACT

Turbine blades are considered to be heart of turbine and play a vital role in extracting energy from high temperature and high pressure gases. Withstanding of gas turbine blade at high temperature for better efficiency and work output is a major consideration in design. This study is primarily focused on Thermo-structural Properties, centrifugal and the thermal stresses arising in the blisk. Results will be in terms of maximum operational radial Stress, maximum operational hoop Stress, maximum operational von-mises stress, temperature field, total deformation. Creep evaluation is obtained for the gas turbine blisk for Nimonic-90, when the blisk is operated at 43000 RPM and at an 1100^0K elevated temperature. The object is to provide understanding and information for designers to improve the life and efficiency of future generation gas turbine engines. A typical turbine rotor blisk (bladed disk) has been modeled by using Solid Works. Axial Gas Turbine blisk operating close to 43,000 RPM and at an elevated temperature of 1100^0K is numerically simulated for steady-state thermal and non-linear static structural analysis (i.e., thermal Stress) using ANSYS WorkbenchV16.0.Two materials of nickel based super alloys namely Nimonic 90, and Inconel alloy 718 have been used for analysis to determine the suitability and strength of material.

Keywords— *CFD, Blade, Turbine, Axial blade*

I. INTRODUCTION

The safety of gas turbine engines has always been the main concern of aircraft certification authorities. Economic pressure resulting from the reduced availability ofstrategic materials and the high cost of engine components and the continued demand, by all engine suppliers/users, for longer life and higher thrust to weight ratio continue toprovide a stimulating challenge for engine designers/developers.

A blisk (bladed disk) is a turbo machine component of Small Gas Turbine Engine (SGTE) comprising both rotor disk and blades. It consists of a single part, instead of an assembly of a disk and individual, removable blades. Blisks may be integrally cast, machined from a solid piece of material, or made by welding individual blades to a rotor

disk. The term is used mainly in aerospace engine design. Blisks may also be known as integrally bladed rotors (IBR).

Like the Hyperbolic method, the live weight in disks defined by the CS parameterization is controlled by six input parameters. The definition of the dead weight is the same as with the Web and Hyperbolic methods, but the similarities end there.

The CS disk geometry is broken up radially into three segments: the inner rim, the web, and the outer rim. The inner and outer rim are modelled with fourth order line segments while the web region is modelled with a linear line segment. With the exception of the disk rim width, all of the inputs for the live weight are non-dimensionalized. Non-dimensionalization of the geometry parameters creates a more robust design space ideal for use in an optimization routine. Increasing turbine inlet temperature is a means of improving efficiency, but this temperature exceeds allowable temperature of metal parts. In addition, the gas turbine hot parts operate in a harmful condition of centrifugal and gas pressure forces and thermal cycling. Subsequently, most of the life problems are encountered in this area. Blade metal temperature distribution and temperature gradients are the most important parameters determining blade life. Therefore, accurately predicting blade heat transfer parameters is essential for precisely predicting blade life. As mentioned above, one of the most important loads for calculating blade life is temperature distribution. In cooled turbines, in order to calculate blade temperature precisely, internal coolant, external hot gas, and metal conduction should be simulated simultaneously by conjugate heat transfer (CHT) method. There have been increased research efforts in applying the CHT methodology to simulate gas turbine blade heat transfer.

Fig. 1 shows disk parameterization methods. These are continuous slope disk, hyperbolic disk, web disk.

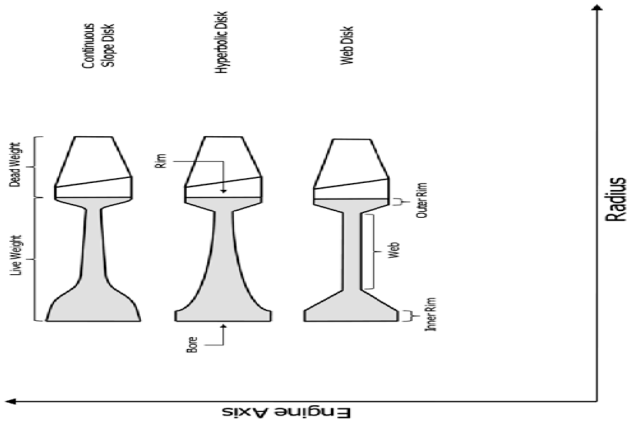

Fig 1: Disk parameterization methods

Turboprop and Turbo shaft

Fig. 2 shows the schematic of turboprop and turbo shaft.

• The exhaust stream drives an additional turbine -

1) This turbine drives a propeller or a helicopter rotor system.

2) The propeller accelerates air generating thrust or lift.

Application:

• AE2100, the world's leading high power turboprop, powering the Hercules C-130J.

• RTM322 turbo shaft powering Apache helicopters.

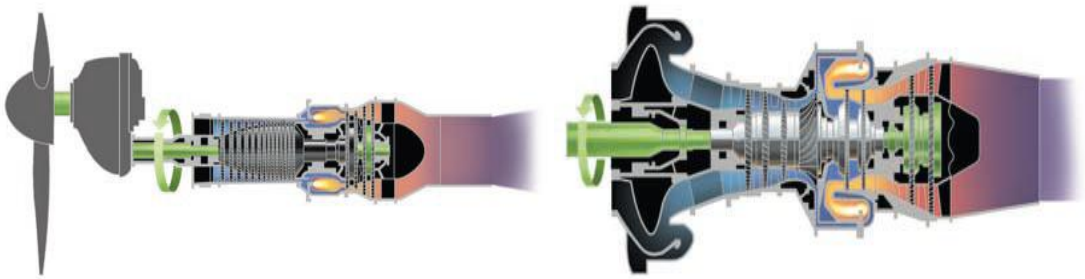

Fig. 2: Schematic diagram of Turboprop and Turbo shaft engines.

II. LITERATURE

Michael et al [1]carried out major enhancements to NASA'sengine-weight estimate computer code (WATE) are described. Furthermore, the stress distribution for various disk geometries was also incorporated, for a life-prediction module to calculate disk life. A material database, consisting of the material data of most of the commonly-used aerospace materials, has also been incorporated into WATE. Maruthi B H et al [2] has developed finite element (FE) prediction to find over-speed and burst-margin limits. The result shows that the magnitude of the tangential stress components is higher than that of the radial stress components for all the discs under variable temperature distribution. The tangential stress components are higher at inner surface and decreases toward outer surface. The burst margin speed was predicted as per formula and obtained for 18,500, 19,000 and more than 22,000 rpm for thermal + blade load + centrifugal load, thermal + centrifugal load and only centrifugal load respectively. Mark G. Turner et al [3] focuses on rapid low fidelity design and optimization of isotropic and transversely isotropic disks. Discussion includes the development of a one dimensional plane stress model, disk parameterization methods, and the implementation of a genetic algorithm for shape optimization. Three traditional geometry definition methods are compared to two new methods that are described and produce more optimum designs. Hardware from the GE E3 is used as an example. The analysis code is open-source, graphical, interactive, and portable on Windows, Linux, and Mac OS X. Tsu-Chien Cheu [4] proposed two optimization procedures which can effectively utilize the weight and stress gradients for disk shape optimization. These two methods are the feasible direction method and sequential linear programming. In structural optimization, design variables may be finite element nodal coordinates, element thickness, etc. In this paper, an efficient method is used for design sensitivity analysis. The technique of

isoparametric mapping is used to generate a finite element mesh from a smallset of master nodes. In order to assure that a general boundary shape can be achieved for the optimal design of a complex structural shape, selected coordinates of the master nodes are used as the design variables. These variables are permitted to change within a specified design envelope. AmrElhefny et al [5] the stresses and deformations of a turbinedisc were studied.The goal was to highlight the stress and deformation distribution to assist in the design of a disc as well as to demonstrate the importance of using finite element (FE) analysis in simulating an actual design case. They present the real model, a two- dimensional (2D)axisymmetric model for a non-uniform disc was analysed using FE analysis. The stresses and deformations developed as a result of the disc operating conditions at high rotational speeds and thermal gradients were evaluated using two types of heat transfer modes—conduction and convection, taking into consideration the material behaviour at elevated temperatures. Majid Rezazadeh Reyhaniet al [6]carried out methods used for calculating blade temperature and life are demonstrated and validated. Using these methods, a set of sensitivity analyses on the parameters affecting temperature and life of a high pressure, high temperature turbine first stage blade is carried out. Investigated uncertainties are: (1) blade coating thickness, (2) coolant inlet pressure and temperature (as a result of secondary air system), and (3) gas turbine load variation. Results show that increasing thermal barrier coating thickness by 3times, leads to rise in the blade life by 9 times. Prathapanayaka Rajeevalochanam et al [7] carried out aero-thermodynamic and mechanical design of a single stage axial turbine stage for small gas turbine engine in Propulsion Division, CSIR-NAL. The turbine stage has undergone a series of design improvements.Mechanical design & analysis of the turbine stage is carried out using ANSYS-Mechanical™ software. Detailed non-linear steady thermal-structural analysis is carried out for both stator assembly and rotor blisk. Arthur G. Holms et al [8],calculations were made to determine the influence of changes in temperature distribution and in elastic material properties on calculated elastic stresses for a typical gas-turbine disk. Severe temperature gradients caused thermal stresses of sufficient magnitude to reduce the operating safety of the disk. Small temperature gradients were found to be desirable because they produced thermal stresses that subtracted from the centrifugal stresses in the region of the rim.

III. MATERIALS AND METHODS

3. 1 Material and its properties

The rotating disks of a gas turbine engine are subjected to body forces, blade loads, and thermal loads as well as shafttorque loads and engine thrust and landing loads. The important design loads are body forces, blade loads, and thermal loads. The influence of other loads on disk overall design is only local.The body forces and blade loads are proportional to the square of the rotational speed. The thermal loads are caused by the disk heating and cooling.

Table 1 Properties of Inconel Alloy 718

Properties	Inconel Alloy 718
Density (g/cm^3)	8.19
Elastic Modulus (GPa)	208
Poisson's Ratio	0.29
Thermal Expansion (µm/m •°C) 21 – 93°C	9.0-20.7
Melting Point (°C)	1260 – 1336
Thermal Conductivity (W/m-^{0}C)	11.4
Specific Heat (J/kg-^{0}C)	435
Ultimate Tensile Strength(Mpa)	1398

Table 2 Properties of Nimonic 90

Properties	Nimonic 90
Density (g/cm^3)	8.18
Elastic Modulus (GPa)	204
Poisson's Ratio	0.29
Thermal Expansion (µm/m •°C) 21 – 93°C	12.7
Melting Point (°C)	1310 – 1370
Thermal Conductivity (W/m-^{0}C)	11.5
Specific Heat (J/kg-^{0}C)	446
Ultimate Tensile Strength(Mpa)	1175

3.2 The methodology

Structural formulations in this study are based on the following assumptions:

(1) The thickness of the disk is small relative to its radius; thus (a) the variations of radial and tangential stresses over the thickness can be neglected, (b) the variation of temperature gradient in the axial direction can be neglected, and (c) a plane stress condition can be assumed.

(2) The displacements are small; thus the small-angle assumption can be made.

(3) The disk material is homogeneous and isotropic and follows Hook's law

The validity of this assumption was verified with the mechanical design group at General Electric Aircraft Engine Group.).

Fig.3 shows a disk of variable cross section‘t’ whose inside radius is $r_i$and outside radius is $r_0$and a free-body diagram in the polar coordinate system of a differential element of the disk with all the applied loadings.

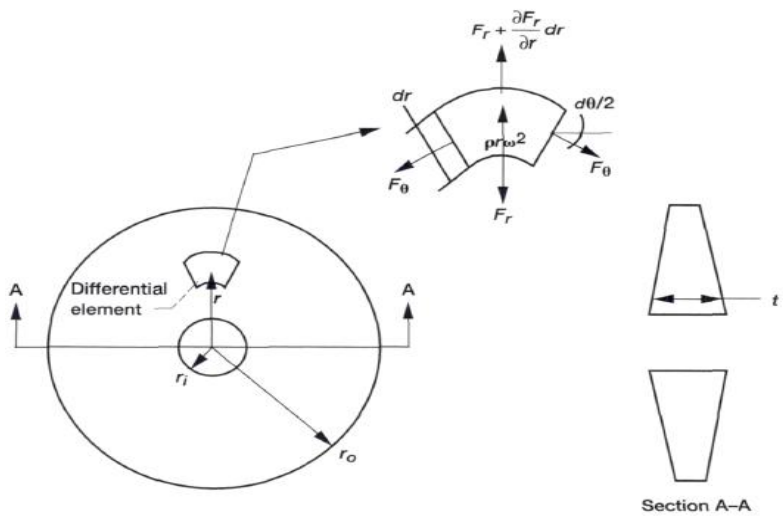

Fig. 3: Typical Rotating Disk

3.3. General solution finite difference approach:

$$\frac{d^2u}{dr^2}+\left(\frac{2mr+n}{mr^2+nr}\right)\frac{du}{dr}+\left[\frac{\nu}{r^2}-\frac{1}{r^2}+\frac{\nu}{r}\left(\frac{2mr+n}{mr^2+nr}\right)\right]u=$$

$$\alpha(1+\nu)\left[\frac{dT}{dr}+\left(\frac{2mr+n}{mr^2+nr}-1\right)T\right]-\frac{\rho\omega^2\left(1-\nu^2\right)}{E}r \quad (15)$$

The appropriate method for solving equation (15) is either the finite element method or finite difference method.

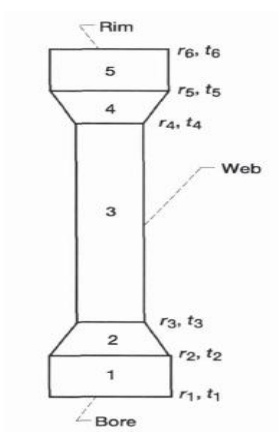

Fig. 4: Schematic of Disk Cross-Section

where r_i is the radius of the section i and t_i is the thickness of the section i (i=1 to 6).

In this study an optimization technique was used to determine the sizes of the rotating disks. Therefore, the finite difference technique was used

3.4 Modelling

Geometry for present model was designed based on Mark G. Turner et al. (4) and the profile used is "Continuous Slope" Parameterization. But due to computational time and mesh constraints the model is made Axi-symmetric cyclic sectorfrom 43 Rotor blades and 27 Stator blades, and analysed for cyclic sector of rotor blisk and the modelling is done by using Solid works software.Fig. 5 shows the solid blade of gas turbine blisk.

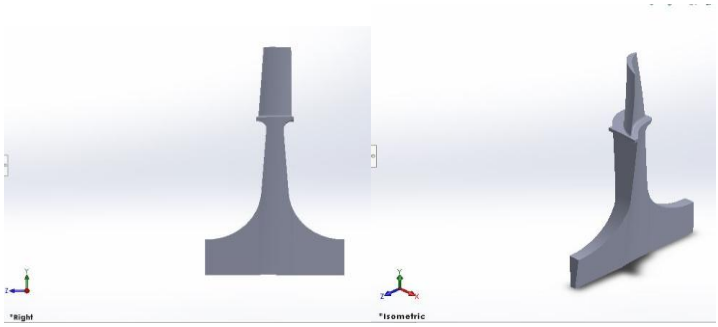

Fig. 5: Axi-symmetric Cyclic Sector of Gas Turbine Blisk

3.5 Meshing and boundary conditions

Initially fluid mesh for rotor and stator are generated in ANSYS Turbo Grid with high degree of accuracy is generated. Fig. 6, 7 shows internal mesh view of stator.

This mesh contains hexahedral mesh and quadrilateral faces at the boundaries.

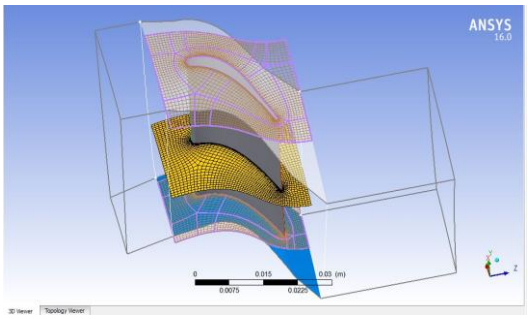

Fig. 6: Internal mesh view of Stator Fluid

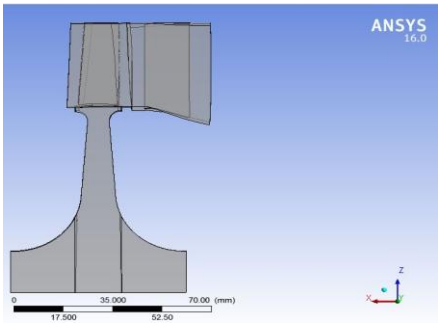

Fig. 7: Front view of Solid and Fluid Interface

3.6 Boundary conditions:

The boundary conditions were taken from Prathapanayaka Rajeevalochanam et al [2],where pressure inlet is 4.8 bar,pressure outlet is 1.86 bar and temperature inlet is 1100^0K.

4. RESULTS AND DISCUSSION

Fig. 9 shows temperature mapping from CFD simulation.After the conjugate heat transfer procedure is done the results are imported onto solid rotor blade through external data in ANSYS Package (i.e., through external data). After importing the temperature obtained from CFD simulation.

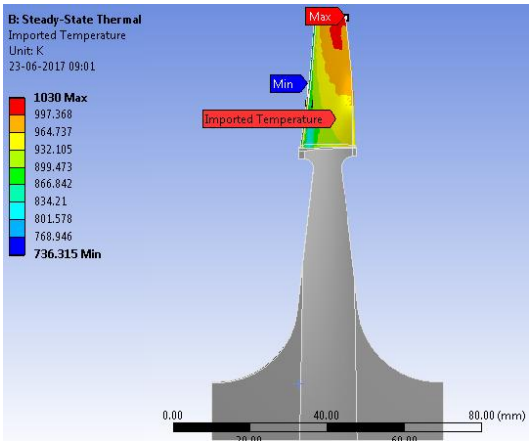

Fig. 8: Boundary Condition for thermal analysis Fig. 9: Temperature Mapping from CFD Simulation

The temperature near the bore region is to be specified for steady-state thermal analysis and value of temperature near bore region is around one half of the actual Turbine Entry Temperature (TET), therefore 5000K temperature is specified and as fluid flows near bore region for cooling of disc, therefore the heat transfer coefficient of 1000 W/mm2.0K is specified near bore region. Fig. 10 shows the boundary condition for thermal analysis.

Fig. 3.29 shows pressure mapping from CFD simulation. The axial displacement of the rotor is constrained for static structural case i.e., displacement in x, y are zero and in z direction it is free, and disk bore is constrained in cylindrical direction i.e., radial and axial are free whereas tangential is fixed and rotor turbine blisk is operating close to 43000 RPM.

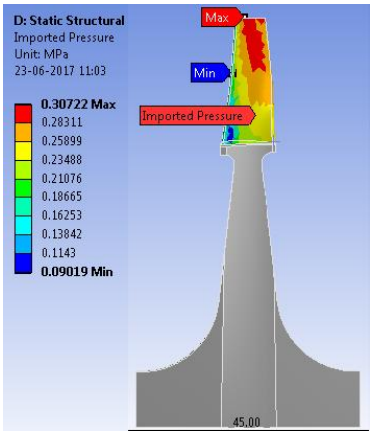

Fig. 10: Pressure Mapping from CFD Simulation

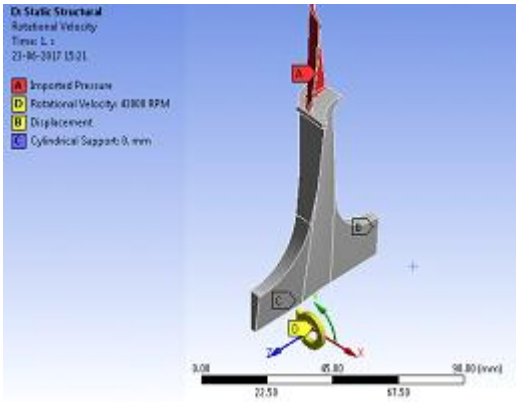

Fig. 11: Boundary conditions and constraints for structural analysis

Fig. 12 shows radial distance vs temperature for gas turbine blisk, i.e., the temperature is more near the blade tip region as it is exposed to more fluid temperature and it decreases till the bore region, since cooling air is passed through bore region, the temperature near bore region will be half of the maximum Temperature Entry Temperature (TET).

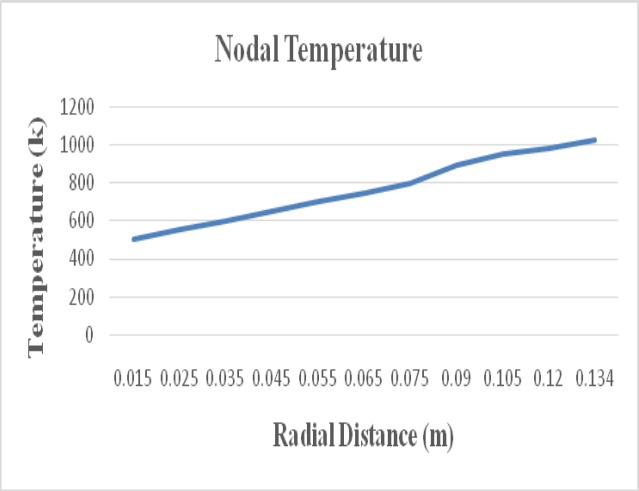

Fig. 12: Radial Distance vs Temperature for Gas turbine blisk

Fig. 13 shows radial distance vs hoop stress, variation of Hoop(Tangential) stress over the radial distance of gas turbine blisk for Inconel Alloy 718. The hoop stress is more near bore region since it is mounted on shaft, due to higher rotational speed the stress generated is going to be more near the bore region and decreases up to the outer rim of the disk.

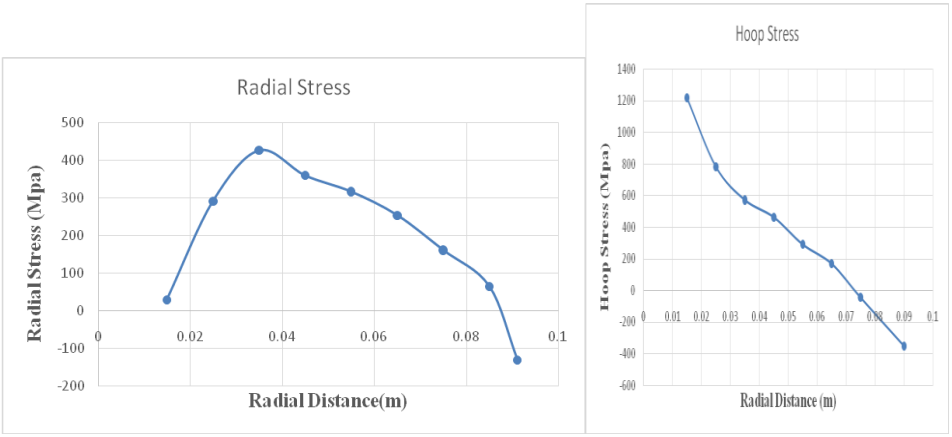

Fig. 13 Radial Distance (m) vs Radial Stress, Hoop Stress (Mpa) For Inconel 718

Fig. 4.10 shows radial distance vs radial stress for Inconel alloy 718, since it is hollow disk the radial stress is more in the mid of the rotor blade and it is minimum near the bore and hub region, since it is subjected to higher rotational speeds.

Fig. 14 shows radial distance vs radial stress for Nimonic 90, since it is hollow disk the radial stress is more in the mid of the rotor blade and it is minimum near the bore and hub region, since it is subjected to higher rotational speeds.

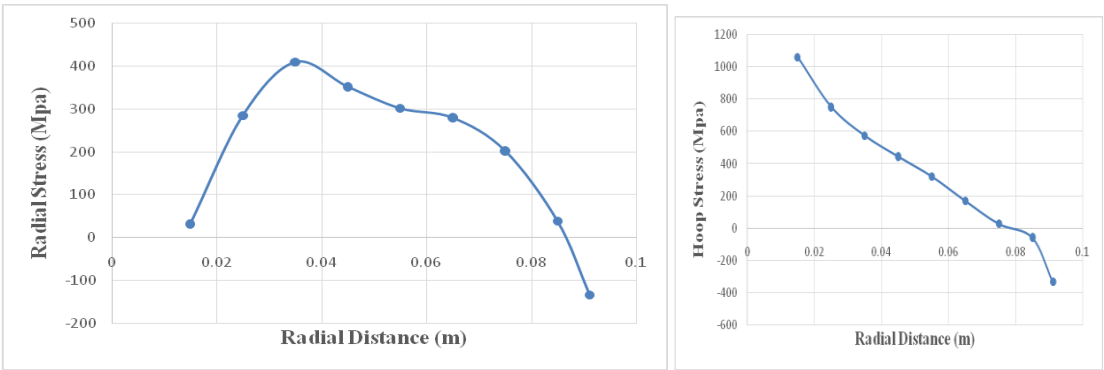

Fig.14 Radial Distance (m) vs Radial Stress, Hoops stress (Mpa) for Nimonic-90

5. CONCLUSIONS

Turbine rotor assembly is more vulnerable to failure due to structural and thermal load. Distribution of stress along blade was studied by software and it shows that critical region of turbine blade which is between hub and blade requires careful attention. Maximum deformation occurs at tip section of blade. Analysis is carried out using commercial FE package ANSYS Mechanical for the Structural evaluation of the gas turbine blisk. The stresses are well below the design limits. Based on the results obtained the following conclusions have made:

- It is observed a maximum temperature of 1040^0k near blade tip and 500^0k near bore region.
- The allowable von-mises, radial, hoop stress stresses within the blisk are limited by safety criterion for both Nimonic 90 and Inconel 718. It was obtained well below the ultimate tensile strength.
- The deformation was 7% less in Nimonic 90 than Inconel 718, therefore Nimonic-90 is better material.
- It is found the equivalent stress was 19.29% less in Nimoic-90 when compared to Inconel alloy-718, therefore Nimonic-90 is better material.

REFERENCES

[1] Michael T. Tong, Ian Halliwell, Louis J. Ghosn, A computer code for gas turbine engine weight and disk life estimation, ASME Turbo Expo, June 2012.

[2] Majid RezazadehReyhani, Mohammad Alizadeh, AlirezaFathi, HiwaKhaledi, Turbine blade temperature calculation and life estimation - a sensitivity analysis, Propulsion and Power Research, 2(2):148–161, 2013.

[3] Arthur Holms, Richard D. Faldetta, Effect of Temperature Distribution and Elastuc properties of materials on gas turbine disk stresses, Report no. 864,2008.

[4] AmrElhefny, Guozhu Liang, Stress and deformation of rocket gas turbine disc under different loads using finite element modelling, Propulsion and Power Research, 2(1):38–49, 2013.

[5] David P. Gutzwiller, Mark G. Turner, Rapid low fidelity turbo machinery disk optimization, Advances in Engineering Software, 779–791, 2010.

[6] M. B. Millenson and S S Manson, Determination of stresses in gas turbine disks subjected to plastic flow and creep, Report no. 864,2010.

[7] Amr M.S. El-Hefny, Mustafa Arafa, A.R. Ragab and S.M. El-Raghy,Stress analysis of a gas turbine rotor using finite element modelling, Production Engineering &Design For Development, PEDD7, February 7 – 9, 2006

[8] Prathapanayaka Rajeevalochanam, S. N. AgnimitraSunkara, VeeraseshakumarChappati, Bala Venkata Ganesh Banda, BalamuruganMayandi and Kishor Kumar, Design of highly loaded turbine stage for small gas turbine engine, ASME Turbo Expo, June 13-17, 2016.