14th International Conference on Science, Technology and Management (ICSTM-19)
Guru Gobind Singh Polytechnic, Nashik, Maharashtra (India)
2nd March 2019, www.conferenceworld.in
ISBN: 978-93-87793-74-3

DESIGN AND MANUFACTURING OF FIXTURE CUM GAUGING ELEMENT FOR PHOTOMETER BOX

Vilas. K. Dhagate[1] , Yash Chaudhari[2] , Rahul Godse[3] , Shrikant Guddalli[4] , Vivek Sharma[5]

[1,2,3,4,5]*Mechanical Second Shift, Guru Gobind Singh Polytechnic, Nashik(India)*

ABSTRACT

Medical technology and medical devices play major roles in the diagnosis and treatment of patients in health care facilitiesMedical equipment has very much importance in the human life at the time of treatment.In high-risk systems, no matter how effective safety devices are, some types of accidents are inevitable because the system's complexity leads to multiple and unexpected interactions.Our device is related with such a Medical Equipment which is a Photometer Box which is used in Blood Testing machines for checking the Immunity of the human health.. If there are errors in the dimensions of the equipment, it would rather directly affect the health of human being. To correctly check and place the component, we have designed this device.

INTRODUCTION

Medical technology and medical devices plays a major roles in the diagnosis and treatment of patients in health care facilities Medical equipment has very much importance in the human life at the time of treatment.In high-risk systems, no matter how effective safety devices are, some types of accidents are unavoidable because the system's complexity leads to multiple and unexpected interactions It is important for healthcare providers to apply a risk assessment and management process to decisions involving new equipment in order to minimize the residual risks of latent errors, which are amenable to correction because of the large window of opportunity for their detection. To correctly check and place the component, we have designed this device which is called Design of Fixture cum Gauging Element which results in elimination errors in device and the risk of Medical Errors.

The fixture cum gauging element is designed by considering the above mentioned risks of the medical equipment's or devices. The fixture cum gauging element is being used for Photometer Box.The photometer Box is used to check the Immunity and Inflationof human being.The procedure for calculating immunity in human blood is as:-

- Mounting the device on Fixture.
- Clamping the device.
- Check the alignmentof the device by alignment rod.

ISBN: 978-93-87793-74-3

- The devices is ready for test to paste the blood sample.
- Take the readings.
- Interpret the Test.

The Fixture is made for checking the alignment and dimensions of the device. Firstly the device is mounted on this fixture and the alignment of the device is checked. If the alignment of the device is correct then only the final stage of checking the dimensions and mounting is done. If the alignment is incorrect then the device is rejected and again the necessary changes are made on it and then again after applying the changes, it is again clamped on the fixture and then all dimensions(Length, Width, Thickness) are checked and then device is said to be ready. Previously the above procedure was not performed in early device so there was maximum chances to get incorrect interpretation of test. The fixture cum Gauging Element help the operator to fix the photometer into the correct position which result the correct interpretation of test.

METHODOLOGY

After analysis of the previous testing method of photometer and incorrect interpretation of result we felt the need of changing fixture design which is nothing but the fixture cum gauging element. Following is the methodology adapted for corrective action:-

1. Study and identify errors in existing testing procedure.

2. Design and manufacturing of fixture cum gauging element.

1.Study and identify errors in existing testing procedure :-

To study and identifying the errors in the existing testing procedures, we use fish bone diagram. A fishbone diagram, also called a cause and effect diagram or Ishikawa diagram, is a visualization tool for categorizing the potential causes of a problem in order to identify its root causes. As per the fish bone diagram analysis, following are the root causes of errors:-

1.1. Alignment of the device:-

Because of the misalignment of the photometer into the fixture, the rays will not able to pass in a straight line. They may get inclined or the path of rays get disturbed which result wrong test.

1.2.Photometer:-

This medical instruments is used to check the Immunity and Inflation of human being. Thus there is no error found in device.

ISBN: 978-93-87793-74-3

1.3.Method:-

In old method of testing they were use vernier calliper for measuring the dimensions of the photometer box (dimensions like length, width and height) which consume more time to carry out the test.

1.4. Operator:-

There was no manual error by operator only the error where found due to misalignment of photometer box.

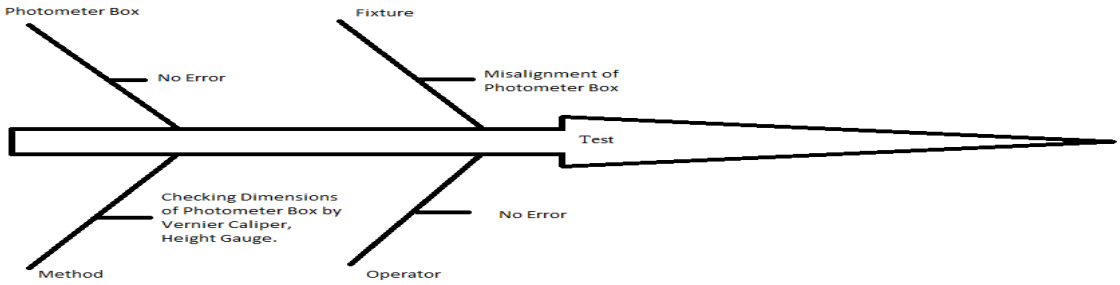

Fig. 1 Fishbone diagram

2. Design and manufacturing of fixture cum gauging element.

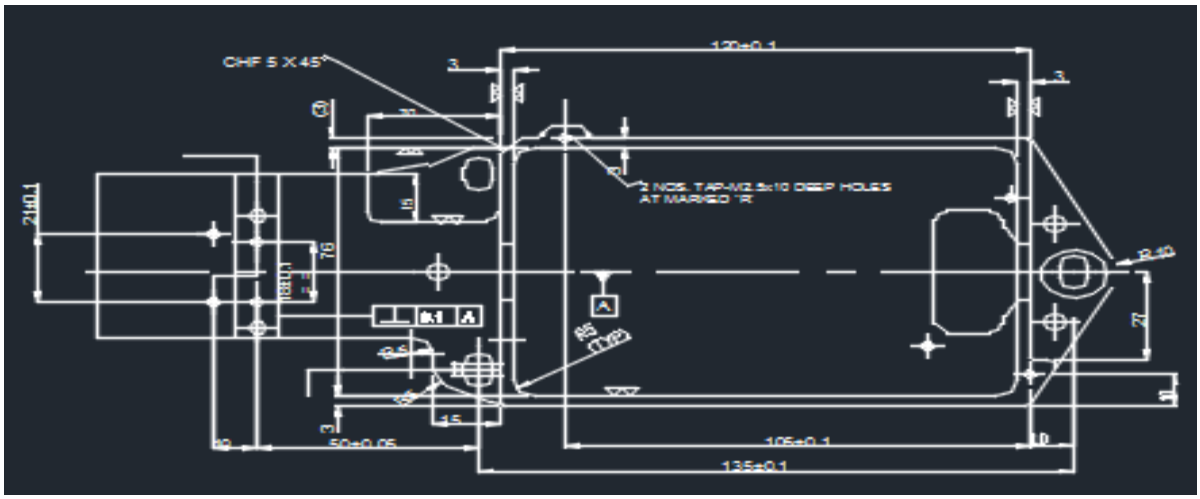

Fig 2 Photometer Box Design.

ISBN: 978-93-87793-74-3

Fig. Actual Photometer Box.

Fig. Actual fixture.

ADVANTAGES

- Accuracy in interpretation of test is increased
- Time required for test is reduced.
- Accuracy has been increased.
- Easy to operate.

ISBN: 978-93-87793-74-3

CONCLUSION

- Risk of loss of human life is reduced due to accurate alignment of the device.
- We have developed a device for photometer box and tested for improvement.
- Accuracy of the Blood Testing machine has been increased.
- Time required for checking is reduced.

REFERENCES

[1] Keil O, Widmann D E. "Assessment of the impact of medical devices on the quality of care".QRB Qual Rev Bull. 1984 Sep;10(9):278-80.

[2] Dain S. Heart Surg Forum "human error and medical equipment design" 2002; 5(3):254-7.

[3] Kalra J. Clin Biochem. "Medical errors: an introduction to concepts". 2004 Dec; 37(12):1043-51.

[4]Wagner U1 "Risks in the application of medical devices: human factors in the medical environment" Qual Manag Health Care. 2010 Oct-Dec;19(4):304-11. doi: 10.1097/QMH.0b013e3181f9ee66.