Second International Conference on Nexgen Technologies
Sengunthar Engineering College, Tiruchengode, Namakkal Dist. Tamilnadu (India)
8th - 9th March 2019 www.conferenceworld.in ISBN : 978-93-87793-75-0

DESIGN AND FABRICATION OF DUEL UNWINDER FOR WINDOW PATCHING AND LINING MACHINE

R.Girimurugan[1], M.Omprakash[2], C.Sivakumar[3], S.Vinoth[4], G.Sathish[5]

[1]*Assistant Professor, Mechanical Engineering, Nandha College of Technology, Erode-52, Tamil Nadu*
[2]*UG Students, Mechanical Engineering, Nandha College of Technology, Erode-52, Tamil Nadu*
[3]*UG Students, Mechanical Engineering, Nandha College of Technology, Erode-52, Tamil Nadu*
[4]*UG Students, Mechanical Engineering, Nandha College of Technology, Erode-52, Tamil Nadu*
[5]*UG Students, Mechanical Engineering, Nandha College of Technology, Erode-52, Tamil Nadu*

ABSTRACT

This project helps to increase the efficiency of the window patching and lining machine and simultaneously to increase the machine time by placing the two unwinding area. Usually the window patching and lining machine has only one winding area in it. When the foil is completed in the core, it takes 15 minutes to change the core and to join the foil. By reducing the pressure in the air shaft, the new core is fixed in the air shaft. The machine is again started to produce the pieces after the new foil is joined. By placing the two unwinding area, core changing time is reduced .When there are two unwinder is fixed, it is easy to operate the machine and it will reduces the changing time. And continuous the Production for machine the increase the production rate, and decrease the change over time.

Keywords *foil, placing, Pneumatic cylinder, Proximity sensor, slicing area.*

I. INTRODUCTION

The nature of problem is machine running time is less, changing of unwinder time is high, production rate is low, labour time is waste because the unwinder.Window patching and lining machine, the worldwide established manufacturer of window patching machines and folder gluers was founded in 1962 by Karl-Heinz. Significant growth and record sales in the mid-eighties resulted in a companywide expansion of production facilities in order to meet increasing demand.

The facility currently boasts a production floor of over 2,000 square meters. Producing machines for printers, finishers and folding carton and corrugated box manufacturers, the family-owned business is run by Michael Window patching and lining machine, the son of the founder. As of this year, his son, Nicolas Window patching and lining machine, is now on board and supporting the family business. Total power consumption is 19 KW

SPECIFICATIONS

Blank and Film Size Ranges

		min	max
Blank length	**mm**	100	1020
	In	3 15/16	4 1/8
Blank width	**mm**	80	1120
	In	3 1/8	44 1/8
Film length	**mm**	50	720
	In	1 15/16	28 5/16
Film width	**mm**	30	840
	In	1 3/16	33 1/16

II. PROBLEM IDENTIFICATION

By using single un winder the production rate will be low, and labour work get increased during the time of unloading and loading the core. The machine idle time gets increased. During the time of changing the core the trolley is used to lift the core at the correct position.

III. POSSIBLE SOLUTION

- Placing of dual unwinder.
- Changing the mechanism.
- Shape and size modification.

IV. METHODOLOGY

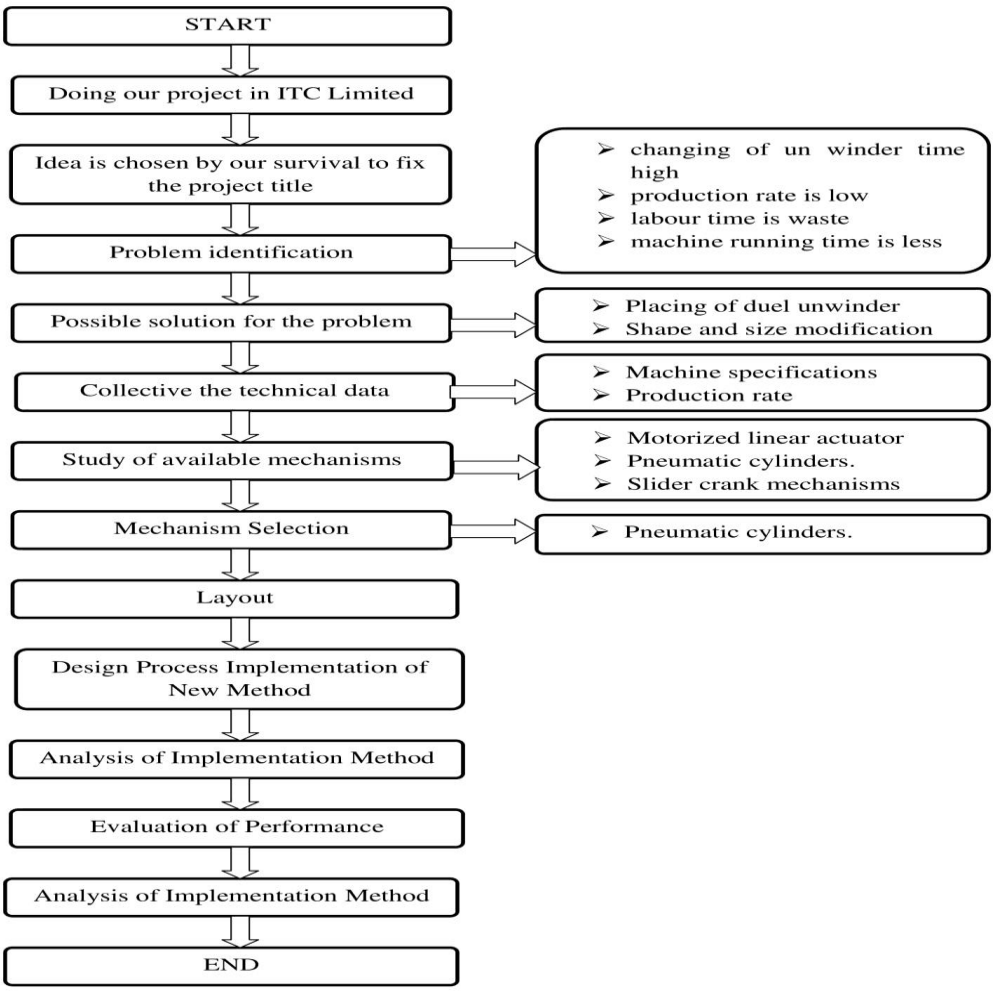

V. CALCULATION

Maximum speed for one hour	=	21500 pieces
Normal speed for one hour	=	16200pieces
Minimum speed for one hour	=	10000pieces

At normal speed,One shift (8hours)
[50minutes running time+10minutes change over time],

Number of foil changed per shift	=	8	
Running time	=	50*8	= 400 minutes
Change over time	=	10*8	= 80 minutes
Total time			=480minutes (8hours)

After implementing our design,

At normal speed,For one shift(8hours)

[50minutes running time+03minutes change over time],

No of foil can be changed	=	09	
Running time	=	50*09	= 450 minutes
Change over time	=	03*09	= 027 minutes
Total time			= 477minutes

Number of piece produced per foil	= 12150 pieces	
Hence before project work no of piece produced	= 12150*8	= 97200 pieces
After implementing our design no of piece Produced	=12150*09	= 109350 pieces
No of piece increased in production	=109350-97200	= 12150 pieces
Production rate increased in percent	= (12150 / 97200) * 100	= 12.5%

VI. LOYOUT

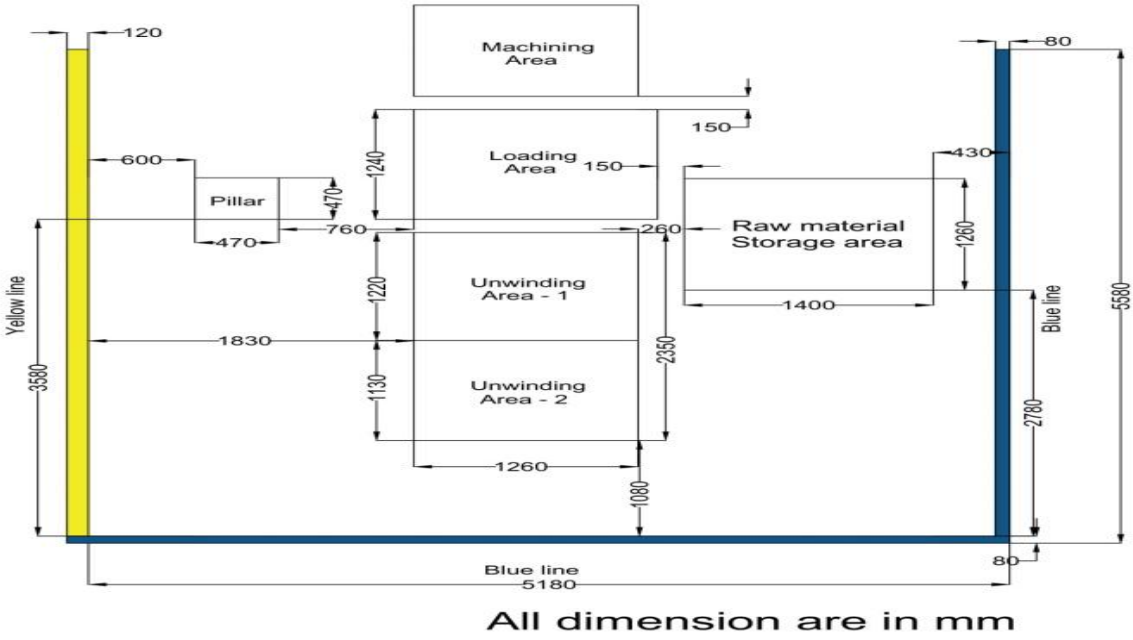

Proposed layout

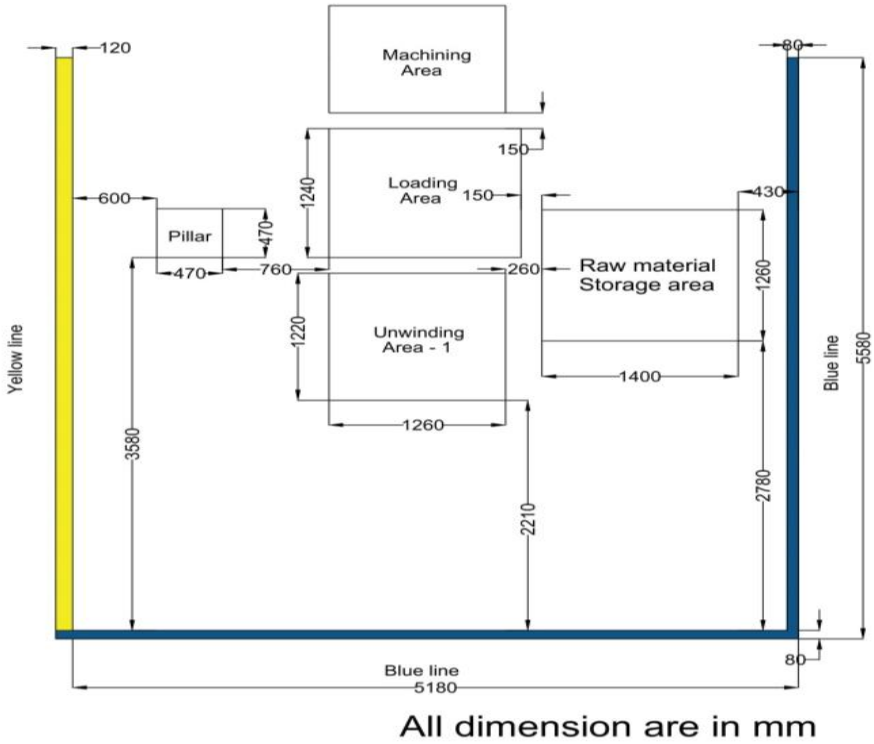

Existing layout

VII. DESIGN

Exisiting Isometric View

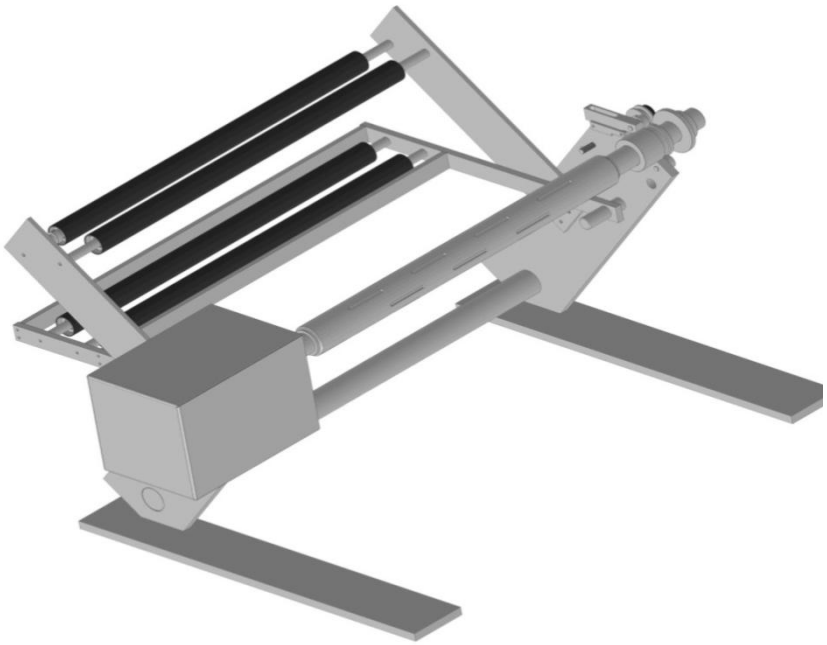

 ISBN : 978-93-87793-75-0

Exisiting Orthographic View

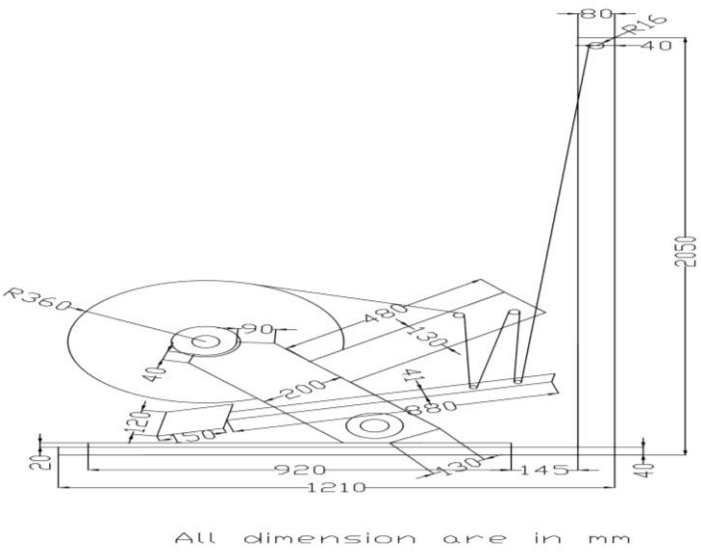

Proposd Isometric View

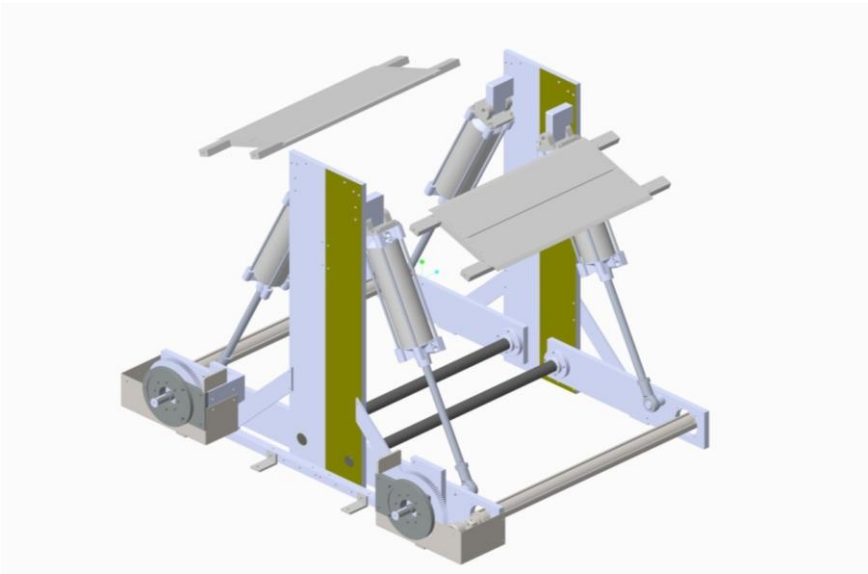

VIII.STANDARD AND FABRICATED PARTS

We explained below table the parts are standard or fabricated.

SL.NO	PART NAME	STANDARD / FABRICATED PARTS
1	Bolt	Standard part
2	Nut	Standard part
3	Proximity sensor	Standard part
4	Air shaft	Standard part
5	Motor	Standard part
6	Pneumatic cylinder	Standard part
7	Roller	Standard part
8	Frame	Fabricated part
9	Slicing area	Fabricated part

IX.COMPONENT OF THE MACHINE

The component used in the machine are listed below one by one,

- Frame
- Pneumatic cylinder
- Air shaft
- Roller
- Slicing area
- Motor
- Proximity sensor

Proximity Sensor

There are two Proximity sensor used in this machine. Proximity sensor is used to sense the foil level. When the foil level decreases to the particular diameter, it intimate the worker to stop the machine. It is placed parallel to the foil and it need electric supply.

Air Shaft

Air shaft is used to hold the foil tightly during the machine running time. Air is released during the time of removing foil and after the new foil is reloaded air is supplied to the shaft.

Pneumatic cylinder

Pneumatic cylinder is used for the purpose of lifting air shaft up and down motion. When the foil is need to unload the manpower is required to reduce the manpower the pneumatic cylinder is used.

Frame

The frame is used to hold the entire component of the machine. The frame is fixed in the base. In frame the pneumatic cylinder is fixed in the top side. The roller is fixed at top of the frame to pass the foil to machine.

Roller

Roller is fixed at the top of the frame. Roller just act as a guide way for the foil. Foil need particular tension before entering into the machine so for this purpose the roller is used.

Slicing area

Slicing area is one of the important component in this machine. It is mainly used for cutting the foil and joining the foil during the time unwinder comes to the end. Joining of the foil is done by using tape.

X. WORKING PRINCIPLE

During the machine running time, foil core has to be changed for every 45 minutes. It takes 15 minutes to change the core by the worker. To reduce the core changing time, dual unwinder setup is used. Consider if there are two unwinder, if one core is connected to the machine, then another core is loaded on the next unwinder and the foil is passed through the rollers to the splicing area and fixed. When the connected foil is finished, it is sensed by the proximity sensor and it gives the alert signal. After the alert signal the machine gets stopped. Then the labour goes to the splicing area and he splice the foil. And he join the another foil by using tape, then the machine starts the process.

During this time, the first unwinder is unloaded by using the pneumatic system. Here the pneumatic cylinders are used to lift the foil up and down motion. The completed core is removed from the air shaft by realising the air pressure in the shaft. And the new core is loaded in the shaft at correct position and air pressure is increased in the shaft to hold core tightly, thus the process is repeated again and again during core changing time.

 ISBN : 978-93-87793-75-0

XI. ANALYSIS

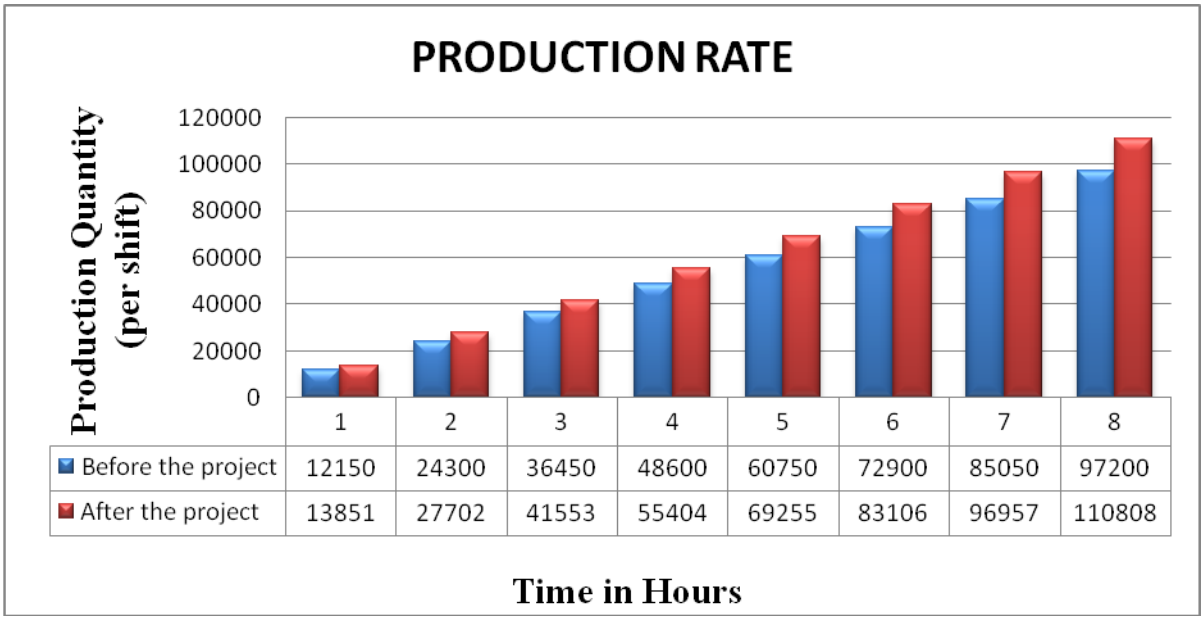

	1	2	3	4	5	6	7	8
Before the project	12150	24300	36450	48600	60750	72900	85050	97200
After the project	13851	27702	41553	55404	69255	83106	96957	110808

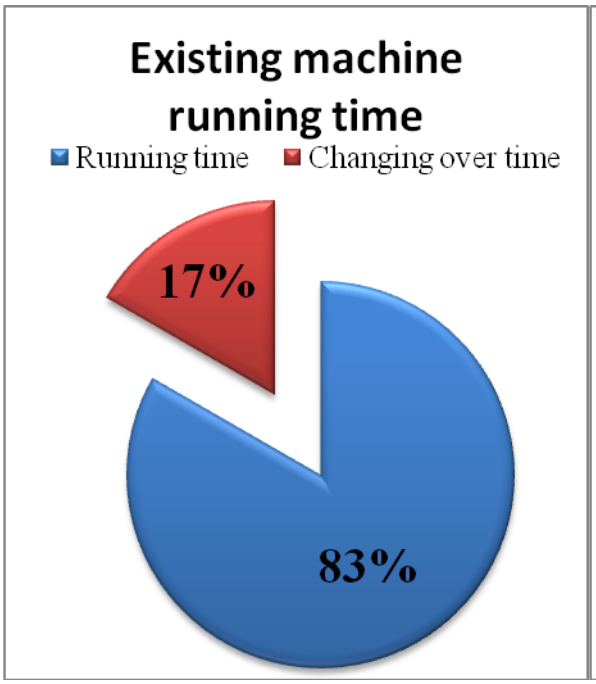

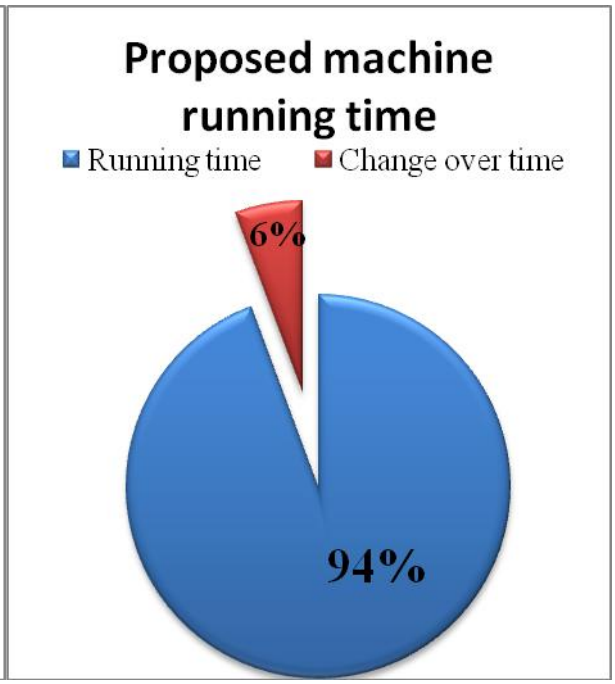

XII.ADVANTAGES

- This setup will increase the production rate.
- It will reduce the unwinder change over time.
- The machine idle time get reduced.
- It will reduce the wastage of foil.
- The labour work gets simplified.

XIII. DISADVANTAGES

- It will increase the machine occupying area.

- Capital investment gets increased.
- Maintenance cost gets increased.

XIV. CONCLUSION

Thus the efficiency of the Window patching and lining machine is increased by the dual unwinder. And also the machine running time and production rate is increased. Number of waste pieces produced also reduced after implementing the dual unwinder.

REFERENCE

[1] Cheng, Chi-Neng. (2005). Design and Control for The Pneumatic Cylinder Precision Positioning Under Vertical Loading

[2] Darrell Whiteside .(2007) basics of unwinder control page no 5

[3] Pidilite industries limited marketing division P. B. no .17411 , Andheri(East) 400 059 ,India

[4]Richard Shemanske Electronic Motor Braking IEEE Transactions on Industry Applications (Volume: IA-19 , Issue: 5 , Sept. 1983) Doi:10.1109/TIA.1983.4504293 ,page 821to 824

[5] Rotary window patching and lining machines (heiber schroeder) made in germany model no WP master