Second International Conference on Nexgen Technologies
Sengunthar Engineering College, Tiruchengode, Namakkal Dist. Tamilnadu (India)
8th - 9th March 2019 www.conferenceworld.in ISBN : 978-93-87793-75-0

DUAL SIDE WATER PUMPING SYSTEM USING SCOTCH YOKE MECAHNISM

A.Ajith kumar[1] S.Murugesan [2] C.Arthi Kumar[3] V.Dhanasekar[4] T.K.Varun Kumar [5]

[1]Final year Mechanical Engineering, Sengunthar Engineering College, Tiruchengode.
[2] Assistant Professor, Department of Mechanical Engineering, Sengunthar Engineering College, Tiruchengode.
[3] Final year Mechanical Engineering, Sengunthar Engineering College, Tiruchengode.
[4] Final year Mechanical Engineering, Sengunthar Engineering College, Tiruchengode.
[5] Final year Mechanical Engineering, Sengunthar Engineering College, Tiruchengode.

ABSTRACT

The invention relate to a mechanism employed for sucking the high viscous fluids by dual side double acting pump using scotch yoke mechanisms. In most of the industries, viscous fluids are sucked by using centrifugal pumps but it gives very less volumetric efficiency and leads to consumption of more power. In our proposed system reciprocating pump arrangement is used whose activating lever is connected to drive by scotch yoke mechanism. The scotch yoke mechanism gets activated from the motor. The motor is connected to the shaft using belt drive. The volumetric efficiency of reciprocating pump is high, hence due to the activation of double pump with the single drive makes a continuous flow of water which increases its performance efficiency

I. INTRODUCTION

Every one of us will need of some kind of water source for drinking, bathing, washing clothes, preparing food and for irrigation. We may get the water from various sources like, lake, river, ponds, open well, bore well. So we have to pump the water from the source and use the water for the various purposes. Pumps operate by some mechanism (typically reciprocating or rotary), and consume energy to perform mechanical work by moving the fluid. Pumps operate via many energy sources, including manual operation, electricity, engines, or wind power which usually come in many sizes that vary from microscopic for use in medical applications to large industrial pumps. Generally these mechanical pumps have numerous applications such as pumping water from wells, filtering of dust in the aquarium, filtering the ponds and aeration, also used in car industry for water-cooling and fuel injection, and finally in the energy industry for pumping oil and natural gas or for operating cooling towers. This Scotch yoke mechanism could be used for conversion between rotational motion and linear reciprocating motion. In general this linear motion can take place in various forms depending on the shape of the slot, but mostly the basic yoke with a constant rotation speed produces a linear motion that is simple harmonic in nature.

II. MAJOR COMPONENTS

1. A C MOTOR
2. SHAFT
3. FRAME
4. BELT
5. BEARING
6. PULLEY
7. SCOTCH MECHANISM
8. RECIPROCATING PUMP

III. CONSTRUCTION

When the motor gets turned on its rotational motion is transferred to the scotch yoke mechanism with the help of belt drive couples it to the drive. The transferred rotational motion is converted into linear translation motion by a scotch yoke mechanism and this motion activates the reciprocating pump arrangement by a connected activation lever. Due to its activation the water from the reservoir is collected by a created suction pressure and the collected water is exhausted at the water collection arrangement. This process occurs simultaneously at both the reciprocating pump which gets coupled at both the ends and continuous water production is achieved with the help of this arrangement

IV. EXPERIMENTAL DESIGN

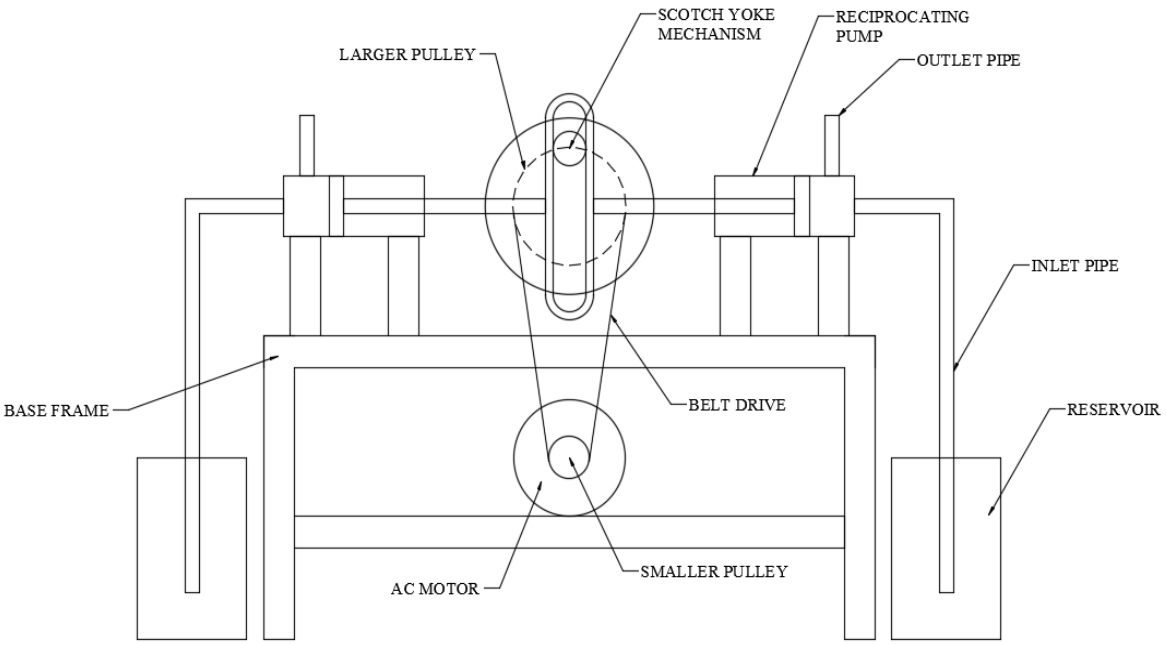

Fig. Layout of dual side water punping system using scotch yoke mecanism

V. WORKING PRINCIPLE

The Scotch yoke (also known as slotted link mechanism) is a reciprocating motion mechanism, converting the linear motion of a slider into rotational motion or vice versa. The piston or other reciprocating part is directly coupled to a sliding yoke with a slot that engages a pin on the rotating part. The location of the piston versus time is a sine wave of constant amplitude, and constant frequency given a constant rotational speed.However, the use of a cam mechanism is not always possible or desirable because of the wear effect due to the contact stresses and high friction between the roller and the cam. The Scotch yoke mechanism is most commonly used in control valve actuators in high-pressure oil and gas pipelines, as well as in various internal combustion engines, such as the Bourke engine, and many hot air engines and steam engines

VII. ADVANTAGES

- Construction is simple
- Continuous water discharge is possible with limited power consumption, thus the discharge rate gets increased.
- Less maintenance is required
- Less skilled labours can operate this system
- Components used for fabrication is easily available with less cost estimation
- Time consumption for discharge of water is reduced when compared to existing methods

VIII. APPLICATION

This setup can be installed in

- Houses
- Industries
- Chemical plant
- Commercial applications, etc.

IX. CONCLUSION

In this paper, we provided an idea of using scotch yoke mechanism for dual side double acting pump. This pump has higher volumetric efficiency and gives continuous flow. The cost of this pump is considerably low when compared to other positive displacement pumps since scotch yoke mechanism is used. It can be used when high precision is required at low cost. It can be used for pumping high viscous fluids.

REFERENCES

[1]. Burton, J.D., Pump Design, Course Module, 1990

[2]. Diepens, J., Design Report CWD 81D Deep well Pump, Technical University of

[3]. Eindhoven, Fac. of Physics, The Netherlands, 1991

[4]. Diepens, J., Smulders, P., Pump Rod Forces in reciprocating Pumps, R 1108 D, Technical University of Eindhoven, Fac. of Physics, The Netherlands, 1991

[5]. Veldkamp, H.F., On Matching the CWD 5000 Water Pumping, WM-163,

[6]. Ananthasuresh, G. K., and Kota, S., 1995, ‘‘Designing Compliant Mechanisms,’’ ASME Mechanical Engineering, 117~11!, pp. 93–96. Saxena, A., and Ananthasuresh, G. K., 2003, ‘‘A Computational Approach to the Number Synthesis of Linkages,’’ ASME J. Mech. Des., 125~1!, pp. 110 – 118.

[7]. Saggere, L., and Kota, S., 2001, ‘‘Synthesis of Planar Compliant Four-bar Mechanisms for Compliant Segment Motion Generation,’’ ASME J. Mech.Des., 123~4!, pp. 535–541 Miller, J.E., “Liquid Dynamics Of Reciprocating Pumps Parts 1 And 2”, The Oil And Gas Journal, April 18, 1985. http//www.wikipedia.com/scotch yoke mechanism

[8]. Veldkamp, H.F., On Matching the CWD 5000 Water Pumping, WM-163,University of Twente, Fac. of Mechanical Engineering, Enschede, The Netherlands,1989

[9]. Van Meel, J., Smulders, P., Wind Pumping: A Handbook (World Bank Technical Paper No. 101, Industry and Energy Series), The World Bank, ISBN 0-8213-1235-9, Washington DC, U.S.A., 1989