2nd International Conference on Emerging Trends in Science, Engineering & Technology
Mahratta Chamber of Commerce, Industries and Agriculture, Pune (India)
29th - 30th September 2018 www.conferenceworld.in ISBN :978-93-87793-46-0

DESIGN AND DEVELOPMENT OF MULTI-FUNCTION OPERATING MACHINE TOOL

Vikrant R.Kaveri[1], Dr. D.S More[2]

[12]Department of Mechanical Engineering, Dr.D. Y. Patil School of engineering, Charholi(Bk), Pune, Savitribai Phule Pune University.

ABSTRACT

This paper presents the "DESIGN AND DEVELOPMENT OF MULTI-FUNCTION OPERATING MACHINE TOOL" which is mainly carried out for heavy production based industries. So in this paper we have a proposed a machine tool which can perform operations like drilling, grinding, cutting, punching etc. The mentionedoperations can however be replaced by similar type of operations. Industries are basically meant for Production of useful goods and services at low production time, low production cost, machinery cost and low inventory cost. In today's era every task have been made rapid and faster due to technology enhancement but this advancement also requires huge investments and expenditure ,every industry wills to make high productivity rate maintaining the quality and standard of the product at minimum average cost. We have developed a model of a machine tool which would be capable of performing different operation simultaneously, and it should be economically efficient. Our Objective behind development of this model is to have conservation of electricity (power supply), reduction in cost associated with power usage, increase in productivity, reduced floor space, reduce production time, reduction of human resources etc.

***Keywords**: Multi-function machine, Drilling machine, grinding tool, Hack-saw blade, punch tool.*

1. INTRODUCTION

This deal with "DESIGN AND DEVELOPMENT OF MULTI-FUNCTION OPERATING MACHINE TOOL". In today's era every task have been made rapid and fasterdue to technology enhancement but this advancement also demands huge investments and expenditure,every industry desires to make high productivity rate maintaining the quality and standard of the product at low average cost.So in this mechanism we have a proposed a machine which can perform operations like drilling, grinding, cutting, punching and some other lathe operations at different working centres simultaneously which implies that industrialist have not to pay for machine performing above tasks individually for operating operation simultaneously. In present condition many electrically operated power machines of different companies with different specifications are available for the use in shop floor. These machines are so precise that they can cut metal with minimum time made up of

different materials but they have one and major disadvantage that those are able to perform single operation of machining at a time. For industries to achieve the mass production, it is necessary to perform multipleoperations with high rate. So it is impossible to depend upon conventional single machines and need the improvement in technology and design of such machines.

Multi-function operation machinetoolhelps us to get high speed cutting rate and to achieve mass production for maximum profit in related companies. As this machine overcomes all the limitations and drawbacks of conventional machines, it is also helpful for small scale industries due to its simple working and operating conditions along with its compatibility, efficiency and affordable price. Moreover, the above mentioned operations can be replaced by similar type of operations.This machine is may be used in industries and domestic operation and low production cost. This project work subject is one in which actually we are learning theoretical concepts in practical view. In an industry a considerable portion of investment is being made for machinery installation.

AIM AND OBJECTIVE OF WORK

The aim of our project is the" Design and development of MULTI-FUNCTION OPERATING MACHINE TOOL", a structure, which is used for performing Simultaneous operations like,

1. Drilling

2. Cutting

3. Grinding

4. Punching

PROBLEM STATEMENT

1. Present machines are very costly and time consuming.

2. Conventional machines require large floor space.

3. Traditional machines are operated by means of electricity which has limited use in the rural areas.

4. Conventional machines are not multi-functional.

2. LITERATURE REVIEW

Before initiating our research work we have undergone through many research papers which indicates that for a production based industries machine installation is a tricky task as many factor being associated with it such as power consumption (electricity bill per machine), maintenance cost, no. of units produced

per machine i.e. capacity ofmachine, time consumption and many more. Some research papers which have led us to approach to the idea of a machine which may give solution to all these factors are as follows: Machine tools nowadays have to be veritable "jack of all trades", able to handle all kinds of materials, to manage without any process materials as far as possible, and be capable of adapting to new job profiles with maximized flexibility. Two highly respected experts on machining and forming from Dortmund and Chemnitz report on what's in store for machine tool manufacturers and users.

2.1 Heinrich Arnold1 November 2001 rather long re-investment cycles of about 15 years have created the notion that innovation in the machine tool industry happens incrementally. But looking at its recent history, the integration of digital controls technology and computers into machine tools has hit the industry in three waves of technology shocks. Most companies underestimated the impact of this new technology. This article gives an overview of the history of the machine tool industry since numerical controls were invented and introduced and analyses the disruptive character of this new technology on the market. About 100 interviews were conducted with decision-makers and industry experts who witnessed the development of the industry over the last forty years. The study establishes a connection between radical technological change, industry structure, and competitive environment. It reveals a number of important occurrences and interrelations that have so far gone unnoticed.

2.2 Dr. Toshimichi Moriwaki (2006) recent trends in the machine tool technologies are surveyed from the viewpoints of high speed and high performance machine tools, combined multifunctional machine tools, ultra precision machine tools and advanced and intelligent control technologies.

2.3 Frankfurt-am Main, 10 January 2011 the crisis is over, but selling machinery remains a tough business. Machine tools nowadays have to be veritable "jack of all trades", able to handle all kinds of materials, to manage without any process materials as far as possible, and be capable of adapting to new job profiles with maximized flexibility. Two highly respected experts on machining and forming from Dortmund and Chemnitz report on what's in store for machine tool manufacturers and users. Multi-purpose machines are the declarations of independence. The trend towards the kind of multi- purpose machining centres that are able to cost efficiently handle a broad portfolio of products with small batch sizes accelerated significantly during the crisis. "With a multi-purpose machine, you're less dependent on particular products and sectors", explains Bergmann.

2.4 R.S.Khurmi, J.K.Gupta in their book "Theory of machines" (Velocities in mechanisms) helps to find Velocity diagrams of slider crank mechanism.

2.5Prof. Nitinchandra R. Patel, Ravi Thakkar, Miteshkumar Rathwa in his research paper "Material selection and testing of hacksaw blade based on mechanical properties" stated that the appropriate saw blade must be selected for better operation and fine cutting by selecting number of teeth per inch.

3. PROPOSED METHODOLOGY

In this project we will generally give the power supply to the shaft on which a pulley is mounted on it, and a second pulley on parallel another shaft to it has been mounted on a drill shaft to which a drill bit is being attached. At one end of the shaft is connected to power supply other end is being joined to a circular disc, through this circular disc scotch yoke mechanism is being performed (rotator y motion is converted to reciprocating motion) .A shaft consist of grinding wheel at the end.

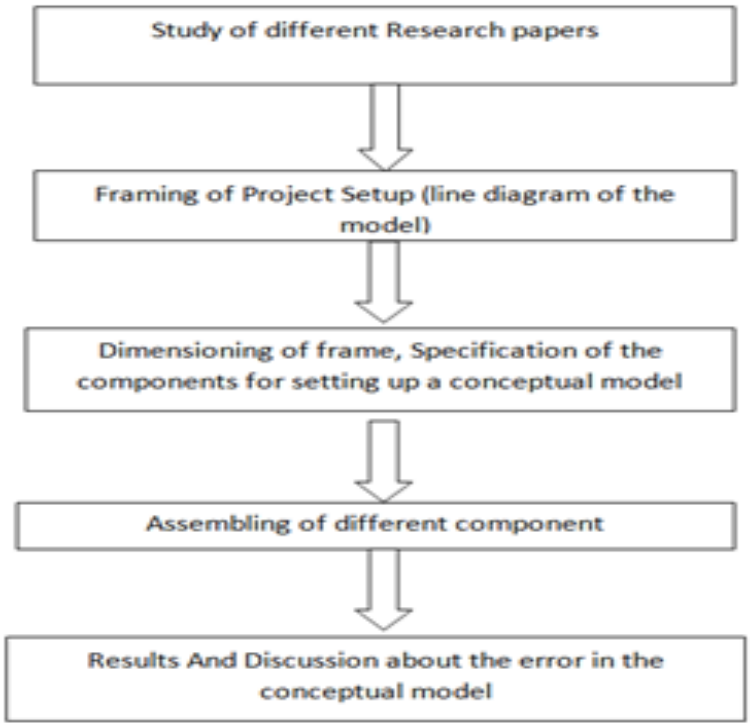

Fig.1 Proposed methodology

4. WORKING PRINCIPLE

There are only two majorprinciples on which our proposed machine tool generally works:

4.1. Scotch-Yoke mechanism: The Scotch yoke is a mechanism for converting the linear motion of a slider into rotational motion or vice-versa. The piston or other reciprocating part is directly coupled to a sliding yoke with a slot that engages a pin on the rotating part. The shape of the motion of the piston is a pure sine wave over time given a constant rotational speed.

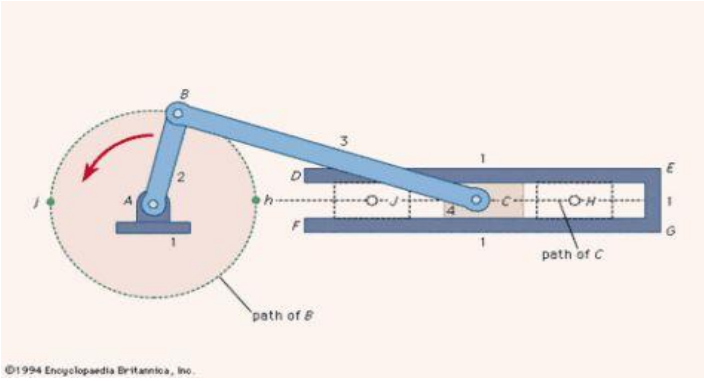

Fig. 1Scotch-Yoke mechanism

4.2. Power transmission through belt& pulley:

4.2.1Working of the Model:

In the conceptual model of "Multi-Functional operating machine tool" we are giving supply to the main shaft through pulley and belt arrangement as we move along the axis of shaft we have mounted a scotch yoke mechanism, through the rotary motion of shaft get converted into reciprocating motion. As we can see that the scotch yoke mechanism is directly fabricated to the main shaft and has same angular velocity as that of main-shaft shaft. We are giving drive to drill shaft through belt-pulley arrangement, now again as we move along the next axis of second shaft further we have again used the bevel gear arrangement to give the drive to grinding centre.

5. SCHEMATIC DIAGRAM(CAD-MODEL)

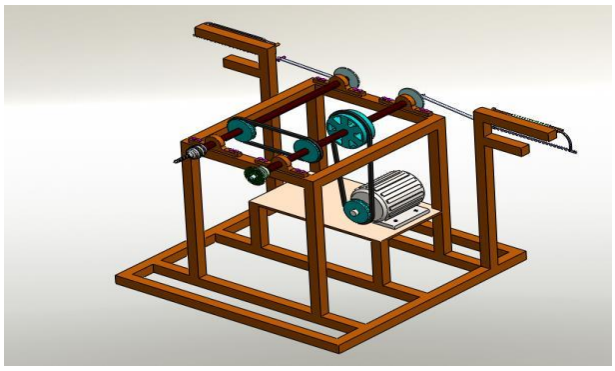

Fig. 1 Schematic diagram

6. SPECIFICATIONS

6.1. Base = L x B = 61x61cm^2

6.2. Height = 60cm

6.3. Motor power = 0.5 HP

6.4. Motor speed = 2500 rpm

6.5. Grinder wheel dia. = 8.5cm

6.6. Length of main shaft = 42cm

6.7. Dia. of main shaft = 1cm

6.8. Pulley diameter, d 1 = d 2 = d 3 = d 4 = 4.5cm & d 5 = 5.5cm

6.9. L 1 = 45.5cm

6.10. L 2 = 52cm

6.11. Drilling centre pulley dia. = 4cm

6.12. Connecting link hack saw length = 30 cm

6.13. Clamp = 17cm x 17cm

6.14. Dimension of shell = 16cm x 14cm

6.15. Distance between pulleys,

6.15.1. P 1 and P 5 = 17.5cm

6.15.2. P 1 and P 3 = 3cm

6.15.3. P 4 and P 5 = 2.5cm

7. RESULTS

For designing the structure, motor is kept as a main power source. According to our design all the necessaryparts are assembled. Although we have designed the structure with considering the necessary safety factors. These are theoretical values that we have collected from the parts from our design dimension. After the actualmarket research for the availability of the parts of our machine, we are able to process the parts of our desireddimensions. In that case, the standard parts with an approx. conformance with our calculated values would bepreferred and corresponding modifications can be done.

8. CONCLUSION

The researchis carried out by us made an impressing task in the field of industrial and automated workshops. It is very usefully for the workers to work in the industrial workshop are in the service station. This project research has also reduced the cost involved in the concern. Project has been designed to perform the entire requirement task which has also been provided.

9. ACKNOWLEDGEMENT

I take this opportunity to thanks Prof. Dr. D. S. More for valuable guidance and for providing all the necessary facilities, which were indispensable and helpful in completion of this work.

REFERENCES

10.1 D.V.Sabarinanda, V.Siddhartha, B. Sushil Krishnana, T.Mohanraj, "Design and Fabrication of Automated Hacksaw Machine", International Journal of Innovative Research in Science, Engineering and Technology, ISSN (Online): 2319-8753, volume 3, April 2014.

10.2 Prof. Nitinchandra R. Patel, Mohammad A. Vasanwala, Balkrushna B. Jani, Ravi Thakkar, Miteshkumar D. Rathwa, "Material selection and May - 16 ISSN: 2321-8134 http://www.ijfeat.org (C) International Journal For Engineering Applications and Technology [06-09] testing of hacksaw blade based on mechanical properties", International Journal of Innovative Research in Science, Engineering and Technology,ISSN: 2319-8753, volume 2, Issue 6, June 2013.

10.3 O.Cakir, A. Yardimen, T. Ozben, "Selection of cutting fluids in machining processes", Journal of Achievements in Materials and Manufacturing Engineering, volume 25, Issue 2, December 2007.

10.4 R. Subhash, C.M. Meenakshi, K. SamuelJayakaran, C. Venkateswaran, R.Sasidharan, "Fabrication pedal poweredhacksaw using dual chain drive",International Journal of Engineering andTechnology, ISSN: 220-223, volume 3,Issue 2,2014. [5] Dr. V.P. Singh, (2007)"MechanicalVibration",

10.5 Walter E. Burton, (1964), "Homemade Power hacksaw for less than $20", Popularscience, Feb 1964. [10] Micro, Small and Medium Enterprises Development Institute, "Project profile onhacksaw blade manufacturing", NIC code:28939, ASICC code: 71303, 2010-11.