International Conference on Recent Innovations in Science, Engineering & Management
R.R. INSTITUTE OF TECHNOLOGY, Bengaluru (India)
10th - 11th May 2019 www.conferenceworld.in ISBN : 978-93-87793-87-3

WIRELESS FIRE FIGHTING ROBO

Dhavalkumar K. Patel[1], Ketan K. Lad[2], Rohit B. Damor[3], BhaveshS. Patel[4]

[1,2,3,4] Electrical Engineering Department,
GIDC Degree Engineering College,
Navsari, India

Abstract:

The main objective of this project is to develop a robotic vehicle which is used for fight against fire remotely in an event of any major fire hazard particularly in industries. Therefore, this project is enhanced to control fire through a robotic vehicle with the improvement in the field of Robotics, human interference is becoming less every day and robots are used broadly for purpose of safety. In such case firefighting robot comes in picture. The fire extinguishing robotic vehicle can be controlled wirelessly using Remote. To develop a fire fighting robot using Bluetooth module for remote operation. The robotic vehicle is loaded with fire extinguisher which is controlled over wireless communication to spray extinguish liquid or material. An Arduino mega is used for the desired operation. The sprinkler can be moved towards the desired direction using IP camera. The controlling devices of the whole system are Microcontrollers, wireless transceiver modules, jet spray and DC motors are interfaced to Microcontroller. When the user feed the commands through a remote controlled device, the microcontroller interfaced to it reads the command and sends appropriate data of that command wirelessly using transceiver module. This data is feds it to microcontroller which acts accordingly on motors and Sprayer. This project controls left, right, forward and backward as well as operated on stairs case movement of robot wirelessly. Many house fires occur when someone is either sleeping or not home. With the creation of such a device, people and property can be saved at a much higher rate with quite minimal damage caused by the fire. Our main aim is to design and build a system that could autonomously detect and extinguish fire.

Keywords -*Robotic Vehicle, Microcontroller,Wireless, IP Camera, Motor.*

I.Introduction

The main aim of this project is to develop a robotic vehicle which is used to fight fire remotely in an event of any major fire hazard particularly in industries.The project is designed to develop a fire fighting robot using Bluetooth module for remote operation. The robotic vehicle is loaded with fire extinguisher which is controlled over wireless communication to throw water. An Arduino mega is used for the desired operation.

The transmitting end using push button, commands are sending to the receiver to control the movement of the robot either to move forward, backward and left or right etc. At the receiving end eight motors are interfaced to the Arduino mega where six of them are used for the movement of the vehicle and the remaining to position the arm of the robot. The Bluetooth module is used to send control signal to Arduino mega to drive DC motor via motor driver IC for necessary work. The fire extinguisher is mounted on the robot body and its operation is carried out from the Arduino mega output through appropriate signal from the transmitting end. The whole operation is control by an Arduino mega. A motor driver IC is interfaced to the Arduino mega through which the controller drives themotors.

Further the project can be improved by using wireless camera so that the person controlling it can view working of the robot remotely on a screen.

This paper consists of main two parts:

- Software
- Hardware

Firefighting robot is based on the four-module integrated system, which includes:

- Motion control
- Obstacle avoidance
- Flame tracking
- Extinguishing

These four modules are responsible for each individual robot task.

II. Block Diagram:

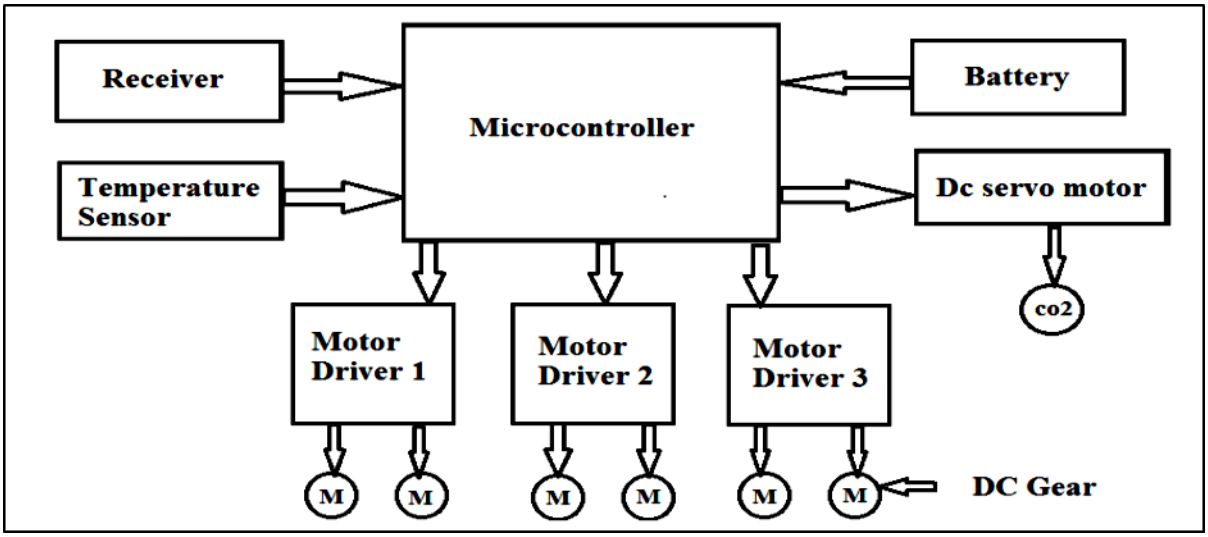

Figure 1.Block Diagram of Wireless Firefighting Robot.

Objectives:

- Construction Of wirelessly controlled Fire extinguisher vehiclesystem.
- Fire extinguishing by wireless controlsystem.
- Movement of the robot in alldirections.

III. Simulation:

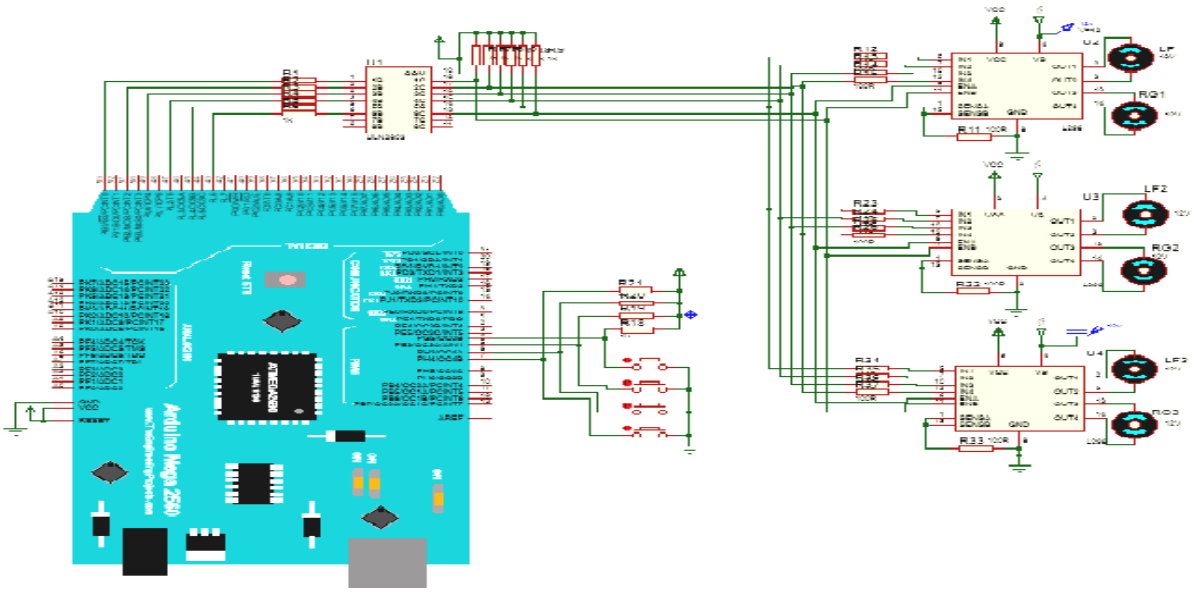

Figure 2. Circuit Diagram with Arduino

Flow Chart:

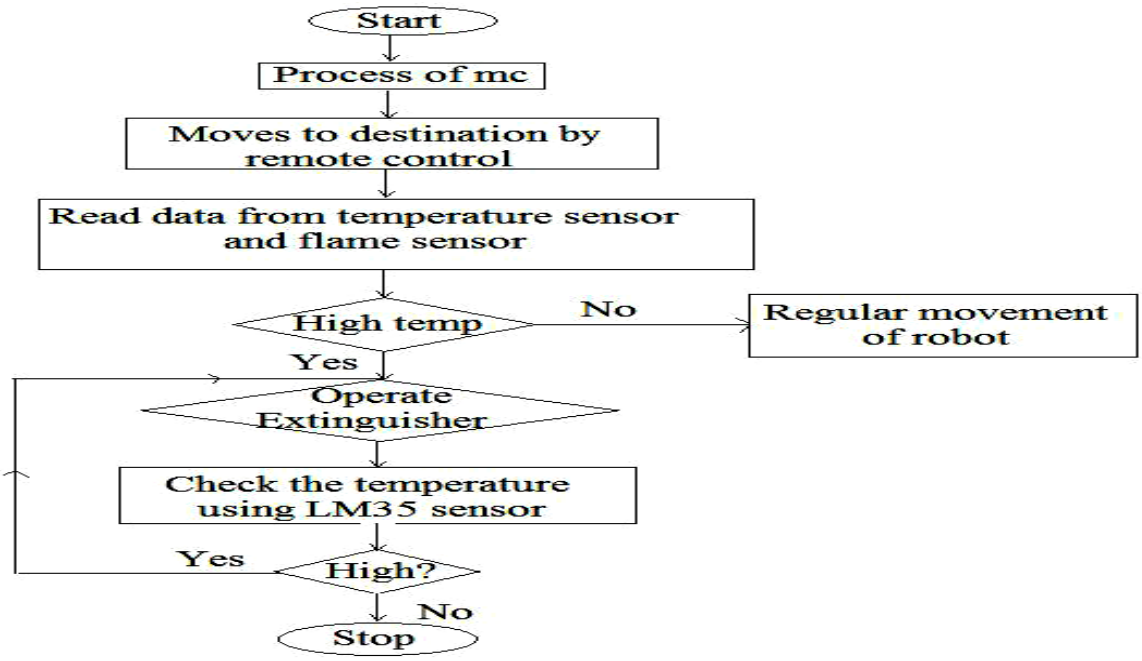

Figure 3.Flow Chart of Robotic System

IV. FIGURES AND TABLES

TABLE 1.Types of Fire Extinguisher

Type / Fire / Extinguisher	CLASS A Combustible materials (e.g. paper & wood)	CLASS B Flammable liquids (e.g. paint & petrol)	CLASS C Flammable gases (e.g. butane and methane)	CLASS D Flammable metals (e.g. lithium & potassium)	Electrical Electrical equipment (e.g. computers & generators)	CLASS F Deep fat fryers (e.g. chip pans)	Comments
Water	✓	✗	✗	✗	✗	✗	Do not use on liquid or electric fires
Foam	✓	✓	✗	✗	✗	✗	Not suited to domestic use
Dry Powder	✓	✓	✓	✓	✓	✗	Can be used safely up to 1000 volts
CO2	✗	✓	✗	✗	✓	✗	Safe on both high and low voltage
Wet Chemical	✓	✗	✗	✗	✗	✓	Use on extremely high temperatures

Specifications:

- Double H Bridge Drive Chip: L298N.
- Logical voltage: 5V Drive voltage: 5V-35V.
- Logical current: 0-36mA Drive current: 2A (MAX single bridge).
- Max power: 25W

❖ Built-in 5v power supply, when the driving voltage is 7V-35V Controls:

TABLE 2. Remote Key and Motor State

Key	Motor
1	Motor 1 Forward
2	Motor 1 Stop
3	Motor 1 Reverse
4	Motor 2 Forward
5	Motor 2 Stop
6	Motor 2 Reverse

Implementation:

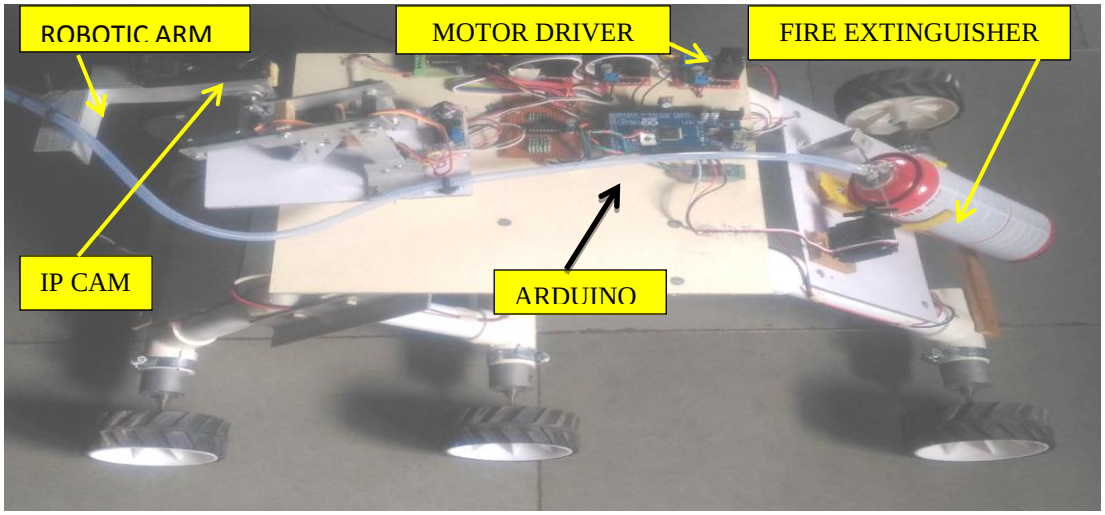

Figure4. Hardware Implementation

Program:

```
#include <Servo.h>
constint m1a = 43;
constint m1b = 45;
constint m2a = 47;
constint m2b = 49;
constintbasea = 53;
constintbaseb = 51;
constint m1en = 5;
constint m2en = 6;
constintbaseen = 7;
constint metal = 4;
intfwd_st=0;
intrev_st=0;
intrig_st=0;
intlft_st=0;
intspd = 255;
int spd2 = 128;
intb_data = 0;
volatileintarm_ang = 120;
volatileintcam_ang = 20;
volatileintgason_ang = 35;
volatileintgasoff_ang = 0;
volatileint temp = 0;
charcmd[] = "SS";
Servo arm;
Servo cam;
Servo gas;
Void setup () {
Serial.begin (115200);
Serial1.begin (9600);
pinMode(m1a,OUTPUT); pinMode(m1b,OUTPUT); pinMode(m2a,OUTPUT); pinMode(m2b,OUTPUT);
pinMode(m1en,OUTPUT); pinMode(m2en,OUTPUT);
}
voidcam_up(){
if(cam_ang< 90){cam_ang += 2;}
cam.write(cam_ang);
Serial.print("CAM UP"); Serial.println(cam_ang);
}
voidcam_dn(){
if(cam_ang>5){cam_ang -= 2;}
cam.write(cam_ang);
Serial.print("CAM DOWN"); Serial.println(cam_ang);
}
voidgas_on(){
gas.write(gason_ang);
Serial.print("GAS ON "); Serial.println(gason_ang);
delay(2000);
gas.write(gasoff_ang);
Serial.print("GAS OFF"); Serial.println(gasoff_ang);
}
voidgas_off(){
```

```
gas.write(gasoff_ang);
Serial.print("GAS OFF"); Serial.println(gasoff_ang);
}
```

V. CONCLUSION

- We can Prevention from dangerous incidents.
- Minimization of
  - Ecological consequences
  - Financial loss
  - Threat to human life

VI.Acknowledgements

- Can be used in record maintaining rooms where fire can cause loss of valuable data.
- Can be used in server rooms for immediate action in case of fire.
- Can be used in extinguishing fire where probability of explosion is high.

REFERENCES:

[1] DU Journal of Undergraduate Research and Innovation 'Control of an autonomous industrial firefighting mobile Robot'. H.P Singh, Akanshu Mahajan-d, N .Sukavanama-b, VeenaBudharaja-c ,swarn Singh-a , Amit Kumar-a and anadiVashisht- c.

[2]Ahlgren, David & Verner, Igor. (2001). Fire-Fighting Robot International Competitions: Education through Interdisciplinary Design. International Conference on Engineering Education.Trinity College FireFighting Home Robot Contest (TCFFHRC)

[3] IJAREEIE/DOI:10.15662/IJAREEIE.2017.0604006 pg.no.2224 'An Innovative Approach to Extinguish Fire Using Android Application' by Kena Patel1, Bhavna Pancholi2.