A survey paper on - Solar Powered Smart Irrigation using IOT and WSN

Anupama Hongal[1] , D.Manjunatha Reddy[2] , R.Varun Kumar[3], Likith[4]

[1]*Assistant Professor,Dept. of ECE,Sambhram Institute of Technology,Bangalore,India*

[2,3,4]*Students, Dept. of ECE,Sambhram Institute of Technology,Bangalore,India.*

***Abstract*—Internet of things (IoT) is a concept which enables communication between internetworking devices. IoT usage in agriculture domain brings in new techniques of irrigation for the fast growing human population. The improved technology bringing new techniques having drawbacks in them leading to new research for reliable improvements in the techniques making the irrigation work faster. This paper features the usage of wireless sensor nodes for perennial plant irrigation land and horticulture. Crops need water in a large volume for good yield and it can be managed by pumping water according to the soil moisture. The objectives include the usage of renewable energy. The firmware of microcontroller runs the motor to maintain the threshold levels, as the data is being shared to the server and end user it results in reduction of the work for farmers.**

Keywords—IoT, internetworking, wireless sensors, renewable energy.

I. INTRODUCTION

IoT is a network of physical objects or 'things' embedded with electronics, software, sensors and connectivity to enable it to achieve greater value and service by exchanging data with the cloud, servers and connected devices. Its compatibility makes it suitable for numerous domains improving the methodologies. Its applications so far developers achieve automated appliances, health monitoring. In the agriculture IoT is used for increasing the yield at the same cost or even less as before. Electricity generation in India by nuclear plants produces harmful waste. Major problem in agriculture is that excess of water is used for irrigation

purposes, the so called modern techniques used are Terrace irrigation, Sprinkler irrigation, Ditch irrigation, methods. These methods still have a drawbacks of wastage of water.

Why do we need to introduce IoT in agriculture domain?

Agriculture, the major economic support of our country still has many ways to be improved and old traditional ways are still followed by farmers just because they find these methods safe, cost effective and having no knowledge of new technology. From the surveys, we still find a large number of diesel engines still being used for pumping water in India and Grid electricity generation in India leaded our country to be the third polluted country in the world, due to the harmful methods of electricity generation. Introducing a system which is pre-programmed for different crops so the farmers has to select the crop from mobile devices so the device calculates the real time parameters like timing using real time clock chip (RTC), humidity levels by the wireless sensors and weather from GSM module. The energy from the solar panels is eco-friendly and low cost, eliminating grid electricity which is majorly available at the off-peak times. Raspberry Pi a SBC which means single board computer which can be used as wireless portable computer uses very less voltage say 5V. Its processing speed is 1.2GHz which is enough to do basic computation of programs to run various sensor nodes and data gathered is processed and this helps the device to work as real time systems

II. RELATED WORKS

Gouthami Eragamreddy et al., [1] the project concentrates on Solar powered Auto Watering System for Irrigation using Embedded Controller. The project aim is automation of watering system in agriculture. The observation of the soil status was more frequent for accuracy of the system and expecting good yield. The proposed embedded system featured moisture sensor in soil to update the condition of the humidity. The embedded controller used is KL25Z an ultra-low cost development platform. In this project, the water overflow is minimized and water to fields is automated according to the moisture level in the soil. The status of the motor is transferred through Bluetooth, whether the motor is on or off. Electricity is also conserved by using the solar power supply.

Shweta B. Saraf et al., [2] The paper IoT Based Smart Irrigation Monitoring And Controlling System aims to improve quality and quantity of the yield by sensing values like temperature ,humidity, soil moisture and water level of the tank from the field without any manpower. The IoT concept is utilized more efficiently. Wireless sensor unit nodes installed in field for receiving real time parameters, a master node to receive and transmit data to ATmega328 which controls watering subsystem. Relay switching unit is the motor controlled which is actually controlled by ATmega328. ZIGBEE is programmed to transmit sensed data to the controller. As per crop selection Threshold values are used to compare the present data received and compared accordingly the motor is switched. End user gets the information through Android phones.

S.Abinaya et al., [3]. The proposed study about INTELLIGENT IRRIGATION SYSTEM–AN IOT BASED APPROACH has its main objective to minimize work for Farming by using new technologies for higher yield of the crops and their water supply. The paper focus on automated controls with latest electronic technology using micro controller pumping water from the resource when earth's dampness content is below than required and GSM phone line. The device is efficient and compatible to changing environment. The upgrading versions are said to contain water monitoring system for, a water meter installed to estimate the amount of water used for irrigation and thus giving a cost estimation. The volume of flow of water is controlled by the valves and moreover, different types of Wireless sensors can also be used. Watering systems will supply water to the crops in more easy way. Timing of when the crops need water is decided by the sensor nodes and depending on the weather and moisture level of soil, the water is fed to the fields. To make the farmer works easily, the Smart Irrigation system is created.

Dr.Pushan Kumar Dutta et al [4] Electricity is needed for the irrigation through which the pumps work. The solar cells gets charged as per the system needs and further stored in the DC batteries. The moment of solar cells according to the sun is controlled by stepper motor. The components used for the tracker are Raspberry Pi, operational amplifiers, Motors, Solar panel (Module type-SS3P) and Stepper Motor Driver and Moisture and temperature sensor

(DHTL1) Sensors gives signals to the Raspberry Pi through which the entire functioning of the system is controlled.

III. OBJECTIVE

- Primary focus of this Smart irrigation is to help the farmers and reduce their work.
- This device can be implemented in perennial plant irrigation land and gardening land.
- In this automation system water availability to the fields is monitored through sensors and as per need watering is done through controlled irrigation.
- This system can be utilized in varied domains by regulating the necessary voltage through solar power. For example Access drip irrigation, weather data monitoring and irrigation facilities.
- Wireless monitoring of field irrigation through WSN and IOT reduces human intervention and allows remote monitoring and controlling on mobile devices.

IV. PROPOSED SYSTEM

This project proposal is to develop a smart irrigation system using Raspberry Pi a single board computer, old traditional ways of farming can come to an end with the aid of this system. Limitations or drawbacks of existing systems in this fields can be overcome. The project working on Raspberry Pi controls the system parameters and the actuators. The field is divided into suitable divisions and wireless sensors are arranged for monitoring the moisture of the soil in that particular division. When humidity of the soil is minimum than actually required level the sensors alert the Raspberry Pi. Initial checking of the parameters like available quantity of water, probability of the rain fall from the weather forecast. . The stored DC voltage is also converted to AC voltage using inverters to run the submersible pumps. Decision making and controlling is done by Raspberry Pi based on the data gathered by Wireless Sensor Nodes. Water level is also monitored using water level indicator. All the gathered data is transferred to the cloud and also sent to mobile device. The threshold values are preprogrammed in the Raspberry Pi according to the crop and we decide the timing of switching of the motor.

WSN is the set of nodes which have the sensors embedded and it is powered by rechargeable batteries which are charged when exhausted. It uses Zigbee protocols to transfer data from the Wireless Sensor Nodes to the Raspberry Pi and further sent to cloud.

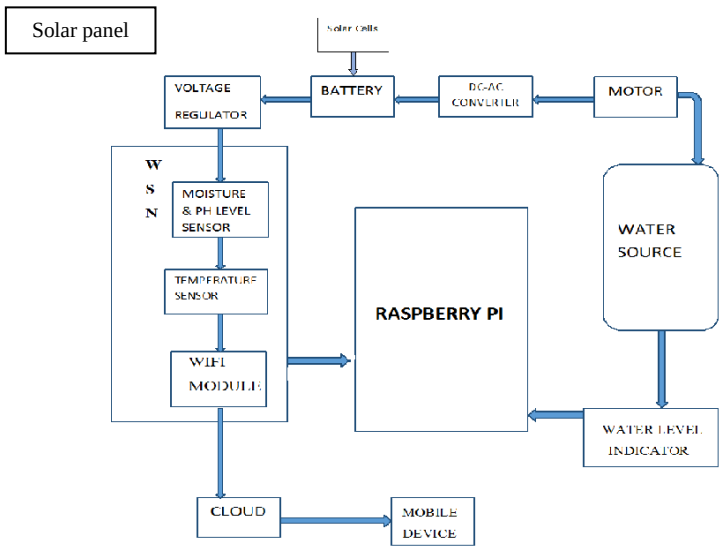

Fig: - Block diagram of solar powered smart irrigation system using IoT and WSN

V.SYSTEM DESIGN

Description of RASPBERRY PI launchpad

Raspberry Pi is low power portable device works under the technology of SBC (single board computers). It requires very less power to function say 5V 2Amp as the input. It includes the 40 GPIO pins where the sensors are connected to the Pi and the functioning of the sensors and their parameters are computed by Python programming language, further all the reading are recorded and saved in the cloud. The Raspberry Pi is the main hub where all the sensors are connected and the mobility of the whole system is easy compared to the diesel pumps since it runs on battery.

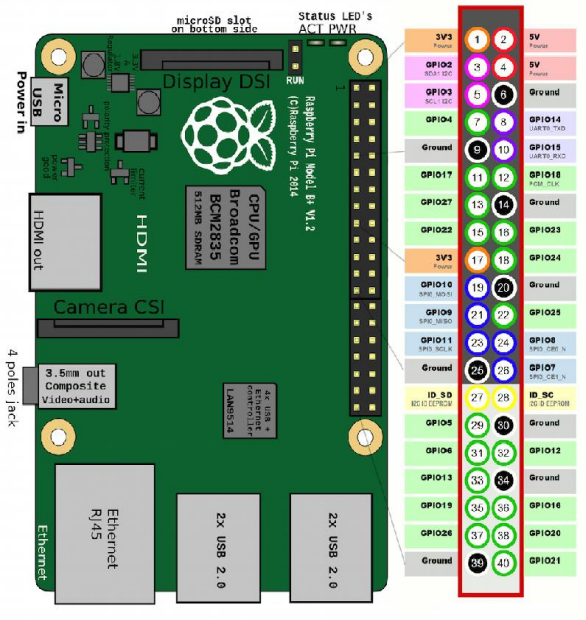

Fig: Raspberry Pi

MOISTURE AND TEMPERATURE SENSOR

DHT11 Temperature and Humidity sensor is powerful and easy to use. This DHT11 temperature and humidity sensor has a full range temperature compensation, low power consumption, stability and calibrated digital signal. A high-performance 8-bit microcontroller is integrated in the sensor with calibration-coefficient saved in OTP memory to provide accurate temperature readings.

HUMIDITY SENSOR

The HDC1010 is developed by TEXAS instruments. It a digital humidity sensor with integrated temperature sensor that provides accurate reading of the humidity and it also is digital and the precise readings are obtained. The HDC1010 is a low cost, low power operating sensor. It has wide range of applications in the field of agriculture.

V. CONCLUSION

Smart irrigation is made cost efficient, water wastage is controlled and unstable power supply is over come in this project. The era of IOT simplifies the farming methods which had huge drawbacks. The controlling of submersible pumps is taken over by Raspberry Pi by gathering data from the wireless senors and collected at the cloud. The farmers who are still following same old traditional ways for irrigation can be changed by educating them with the present technology. The solar power is eco friendly but still it is not cost efficient since the manufacturing process is by high cost. Indian government investing crores for the upgrading these ideas will aid in developing a pollution free irrigation systems and meet the demand of the fast growing population. Farmers fearing about the debts, unpredictable weather condtions and off-peak timing of grid electricity power supply.

REFERENCES

[1] Gouthami Eragamreddy, K.Ramya Sree, " Solar Powered Auto Watering System for Irrigation using Embedded Controller" International Conference on Energy, Communication, Data Analytics and Soft Computing (ICECDS-2017)

[2] Shweta B. Saraf, Dhanashri H. Gawali NBN Sinhgad School of Engineering. "IoT Based Smart Irrigation Monitoring And Controlling System". 2017 2nd IEEE International Conference On Recent Trends in Electronics Information & Communication Technology (RTEICT), May 19-20, 2017, India

[3] Dr.M.Newlin rajkumar .S.Abinaya .Dr.V.Venkatesa Kumar.Computer Science and Engineering ,Anna University, regional campus, coimbatore ,tamil nadu."INTELLIGENT IRRIGATION SYSTEM- AN IOT BASED APPROACH".
IEEE International Conference on Innovations in Green Energy and Healthcare Technologies(ICIGEHT'17)

[4] Dr.Pushan Kumar Dutta. Asst. Professor,Electronics and Communication Engineering Dept., Rajeev Gandhi Memorial College of engineering Nandyal, Andhra Pradesh
"Sensor based Solar Tracker System using Electronic Circuits for Moisture Detection and Auto-Irrigation".
IEEE International Conference on Power, Control, Signals and Instrumentation Engineering (ICPCSI-2017).