HUMAN DETECTION ROBOT

Abhijeet Aman, Akshay Mahato, Abhiram T S, Anand Kumar G

Prof. Shrikant S. Tangade

School of ECE, REVA UNIVERSITY, Bengaluru

ABSTRACT

Earthquakes, firefighting, bomb blasting, landslides, cyclones, floods are some of the natural disasters keep making us realize that there is no power bigger than that of the nature around us. With the evolution of science and technology at an uncontrolled pace, and the creation of sky scraper buildings and dwellings and encroachments everywhere, the risks of losing life due to such calamities has increased. Moreover, with the advancement in nuclear technology, the risks of manmade calamities like nuclear explosions and nuclear radiation leaks have also reached an all-time high. Many people get killed instantly due to these natural and manmade disasters when they hit a region. Many others get trapped under debris for hours and days because their presence there cannot be detected by the rescue teams easily. Hence, they die a painful death as help could not reach them on time. The rescue team workers cannot enter certain parts in such calamity hit zones. And if they do, a rescue worker may end up being a victim himself.Hence,we are proposing a human detection robot which can detect alive humans in debris so that timely help can be made available to the victims

Keywords: *Arduino Uno, Infrared Signals,Obstacle Sensor, PIR Sensor, Wireless Technology*

I. INTRODUCTION

The advent of new high-speed technology and the growing computer capacity provided realistic opportunity for new robot controls and realization of new methods of control theory. This technical improvement together with the need for high performance robots created faster, more accurate and more intelligent robots using new robots control devices, new drives and advanced control algorithms. This Project deals with live human detection robot, it is based on 8-bit Microcontroller. A unique passive Infrared sensor is used in our design that emits infrared rays to detect humans. As a human body emits thermal radiation it will be received and manipulated by the PIR (Passive infrared sensor). Once a human target is located the system has to give an alert which may help to localize the victim location as soon as possible.The project is mainly used in the DEBRIS for Earth quake rescue. The infrared sensors are used to sense the live persons. All the above systems are controlled by the Microcontroller.The Microcontroller is used to control the motors. It gets the signals from the PIR sensors and it

drives the motors according to the sensor inputs. Two DC Gear motors are used to drive the robot. Upon detection the person in need of help is located, at the receiver side it immediately provides an audio alert(buzzer) to the concerned authorities so that the person in need of help whether buried or unable to move can be reached abruptly. This PIR sensor is placed in front of the moving robot that can move in all directions. The robot moves in either direction of the geared dc motor for optimum torque and minimum speed and motor drives with relays for turning and movement in forward and reverse directions with accuracy. The motor driver is a two-wheel geared driver with DC motors attached to perform movements in either forward or reverse directions. On a contrary note Detection of human by designated rescue workers is tiring, reliable but very time consuming; therefore, using the human detection robot for earthquake and other disastrous areas is much more beneficial for detection which is then followed by a rescue operation upon detection. Earthquakes produce a devastating effect and they see no difference between human and material. Hence a lot of times humans are buried among the debris and it becomes impossible to detect them. A timely rescue can only save the people who are trapped and wounded. Detection by rescue workers becomes time consuming and due to the vast area, that gets affected it becomes more difficult.So, the project Human Detection Robot is an autonomous robotic vehicle that moves in the earthquake prone area and helps in identifying alive people. The main aim of the project is to detect the human being by using a wireless remote-controlled robot, which have the sensors that detects the presence of the human being and indicates the presence to user. As it is a wireless robot, it can be easily mobilized and controlled.

II. RELATED WORK

Nakajimaa et al. proposed a system that learns from examples to recognize the person's body in the images taken indoors. The images were represented by color-based and shape-based features. The recognition process is carried out by using the linear Support Vector Machine (SVM) classifiers. This system works in real-time and it can achieve high recognition rate on normalized color histograms of people's clothes. However, the main limitation of this system is that it demonstrated high performance rates only when both the training and test images were recorded during the same day. When the test set contained images of a day that is not repre- sented in the training set, the performance of the system drops down to about 53% due to the change of clothing the person might have every day.

Mohan et al. presented a hierarchical technique for developing a system that locates people in images. In this Adaptive Combination of Classifiers (ACC) technique, the learning occurs in multiple stages. The system is first trained to find the four components of the human body: the head, legs, left arm, and right arm separately from each other. After ensuring that these parts are present in a proper geometric configuration, the system combines the results to classify a pattern as either a "person" or a "non-person". The obtained results demonstrated that this system performed significantly better than a similar full-body person detector. Moreover, the system handles the variations in lighting and noise in an image better than a full-body detector.

III. PROPOSED WORK

3.1 Working of robot

The inputs to ARDUINO are PIR sensor, Ultrasonic sensor and power supply. The outputs are LED, Buzzer and L293D motor driver module, to which a DC motor is connected. A DC motor is used to move the robot in left, right, forward and backward directions. L293D motor drive module controls the DC motor to move in the direction. The direction of the movement is decided as according to program code written. Human can be detected using a PIR sensor. Human being produces 9 to 10 microns of heat which is detected using this sensor. A PIR sensor's angle of detection is restricted to 180° i.e. except the area below the robot it can sense in all the other directions. The distance up to which PIR sensor can detect is restricted within 20ft.

When we will start the Robot, it will move in forward direction, Once the human presence is detected by PIR sensor it stops for some time and triggers the LED and Buzzer to ON to indicate that there is a presence of a human. The Ultrasonic sensor detects the obstacles other than human beings and get deflected from its current path according to program.

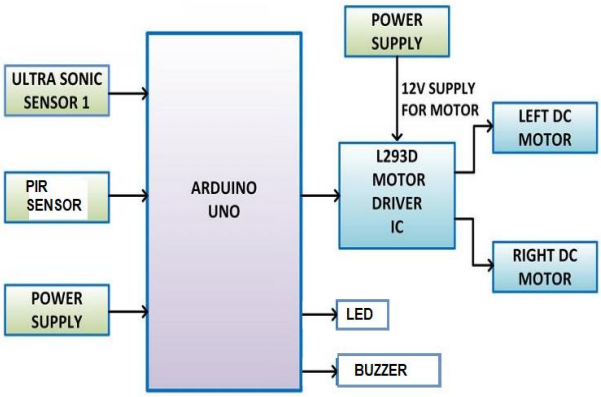

Fig 3.1 Block diagram

3.2 Working of Arduino IDE

The Arduino software is where you will do most of your programming for the Arduino board. The software is compatible with Windows, Mac OSX and Linux. The software is open-source and can be downloaded from www.arduino.cc. When the code is completed, you will want to upload it to the board. Before the code can be uploaded, it needs to be compiled. Compiling basically takes your code and converts it to code that is readable by the Arduino.

3.3 THE HARDWARE SETUP

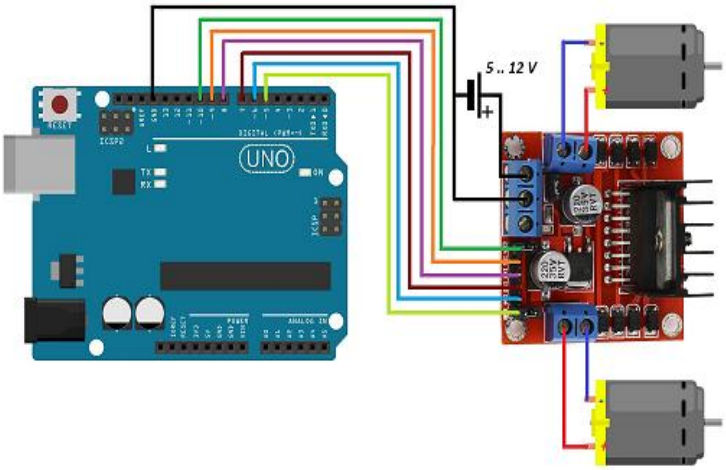

Fig 3.3.1 Interfacing L293D motor driver Module with Arduino

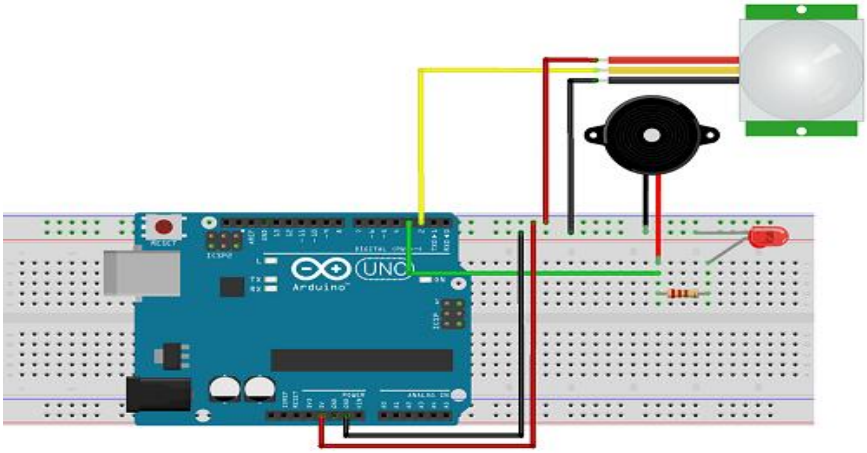

Fig 3.3.2 Interfacing PIR Sensor with Arduino

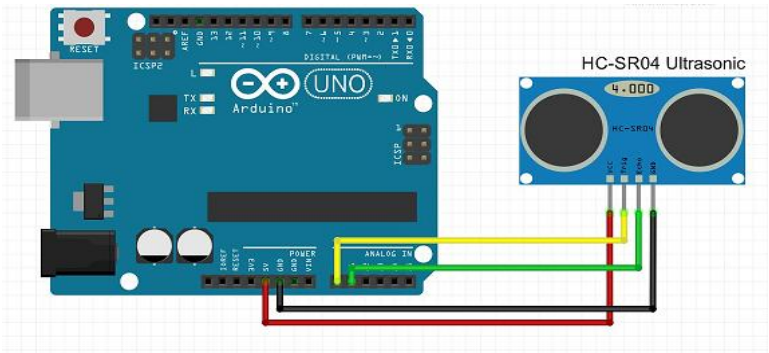

Fig 3.3.3 Interfacing Ultrasonic Sensor with Arduino

Fig.3.3.1 shows the connection of L293D Motor Driver Module with Arduino board. Power supply is connected to 5V power supply pin and Ground pin is connected to GND pin of Arduino respectively. Enable and inputs pins are connected to Digital inputs of Arduino.

Fig.3.3.2 shows the connection of PIR sensor with Arduino board. VCC and GND pin of PIR sensor is connected to 5V pin and GND pin of Arduino respectively. OUT pin is connected to digital input of Arduino.

Fig.3.3.3 shows connection of Ultrasonic sensor with Arduino. VCC and GND pin of Ultrasonic sensor is connected to 5V pin and GND pin of Arduino respectively. Trig and Echo pins are connected to Digital inputs of Arduino.

IV. HARDWARE AND SOFTWARE REQUIREMENTS

Table:4.1 Hardware and Software requirements

HARDWARE REQUIREMENT	SOFTWARE REQUIREMENT
1. ARDUINO UNO R3(Atmega 328-P Microcontroller) 2. PIR Sensor (HC-SR501) 3. Ultrasonic Sensor (HC-SR04) 4. L293D Motor Driver Module 5. DC Helical Gear Motors 6. Robot Chassis 7. LED 8. Buzzer 9. 9V Battery	1. Arduino IDE (Version 1.8.5).

VI. CONCLUSION

A prototype Human Detection Robot working efficiently according to the given scenario. Based on the architecture of main idea on which this prototype robot is working by estimating hurdles and moving according to passage and way of programming through which robot avoids the block position and moves along the open way.

The Robot can move, it covers lot of distance that reduces the use of many sensors or many robots. When the Robot finds a human, it can notify the users by producing continuous beeps.

PIR sensor present in the Robot can detect the presence of human up to 7 meters and its area of coverage is 180°. It can detect the human by attaching a visual camera where the image of the intruder can be notified. It is attached with the ultrasonic sensor which determines the distance between the human and can detect the IR image of the object. Human detection robot can be used at the time of natural calamities to save the lives of human.This can also be used to detect the humans in the war field and for security purpose in the jeweler shops, museums, etc.

REFERENCES

[1] Kenneth G. Eskildsen, Great Neak**, "Method and apparatus for large signal detection in PIR applications"**, u.s.7176469b2, abbrev. Feb, 13.2007.

[2] Reiner quad, Taunusstein, Karlheinz Stock, Loach, **"Infrared detector with direction identification capability",** u.s.4914298a, abberev.appr, 3.1990.

[3] Mr.SpVijayaragavan and Hardeep pal Sharma, **" Live human detection robot for earthquake rescue operation"**, International journal of buisnessintelligents, vol.02,issue 01,page:83-87,june: 2013.

[4] Rajive Joshi, Pratap Chandrapoudel,PankajBhandari**,"An embedded autonomous robotic system for alive human body detection&rescue operation"** , Raidhur, karnataka,vol.4, issue 5,page:1-4, may 2014.