International Conference on Latest Advancements & Future Trends In Engineering, Science & Management
Sambhram Institute of Technology, Bangalore (India)
03rd - 04th May 2019 www.conferenceworld.in ISBN : 978-93-87793-86-6

Sustainable Aquaculture and Smart Agriculture using IOT

D.Manjunatha Reddy[1], R.Varun Kumar[2], Likith[3], Anupama Hongal[4]

[1,2,3]Students, Dept. of ECE, Sambhram Institute of Technology, Bangalore, India.

4Assistant Professor,Dept. of ECE, Sambhram Institute of Technology, Bangalore, India

Abstract—*The proposed system design is a low-cost power efficient embedded system for smart AQUACULTURE based on RAS method and AGRICULTURE monitoring and fertilizing the crops with waste produced from aquaculture. Aquaculture is one of the main food resources for India and the world, Seafood is vastly liked by people all over the world. The economic importance increases day to day with increasing in population. This implementation sustains how aquaculture can be enhanced and more production can be obtained in small area using the well-known RAS system, it is mostly used by the foreign countries having fish production as major occupation. Raspberry Pi is the monitoring device. The electricity to power the systems is gathered from the solar energy since it is a renewable source. The olden and traditional ways of agricultures can be enhanced and improved by using latest technology. The water flow is controlled by the Raspberry-Pi, health and needs of the fish is taken care. The water flow in the agriculture fields is monitored and controlled by various sensors such as humidity and temperature sensor, to protect the crops from pest's ultrasonic frequency is generated. The data is gathered from the sensors through the Wi-Fi module and stored in cloud. Raspberry pi controls the data from the sensors and commands the actuators for altering the physical parameters.*

***Keywords*: -DHTL1, Wi-Fi module, Raspberry Pi, Wireless Sensor Network, IOT, Cloud storage.**

INTRODUCTION

Agriculture and Aquaculture is the strength of Indian Economy. However, for agriculture water consumption is more than rainfall every year. In majority of the cases, water is available but it is not fed to the fields because of unstable power supply. The solar energy is used as the main source to run the system. Since it is renewable source, the energy can be stored in batteries and can be used during night times thereby not worrying about power cuts. The different types of sensors are used to detect moisture, ambient temperature and humidity etc. Aquaculture is introduced in association with smart agriculture, which further gives rich yields for farmers and essential nutrients for the crops. Recalculated Aquaculture System (RAS) method in aquaculture is used because it requires limited exchange of water and use of bio-filtration is to reduce the amount of ammonia toxicity. Filtered water is again sent to the fishes and the process is repeated. PH levels are monitored and altered by pH

regulator. The fish waste produced from the aquaculture plant is collected and the water which is rich in nutrients is sent to the crops which ensures in rich yields for the farmer. This proposed system also ensures reducing the demand-supply gap of the electricity as well as the subsidy burden of the state electricity board by the use of solar panel. Since this is a low cost and one-time investment for the whole system and it works efficiently as long as it gets solar power. The aquaculture is the best way to produce rich yields because it uses limited water exchange method thereby reducing the wastage of water. Various sensors used in the water tanks, fish tanks filtration process and nodes from the fields collect the data and send to cloud by WSN for monitoring purposes. Hence, this system will surely eliminate wastage of water, ensures good yield and reduce pollution.

Necessity of IOT in agriculture domain

Agriculture, the major economic support of our country still has many ways to be improved and old traditional ways are still followed by farmers just because they find these methods safe, cost effective and having no knowledge of new technology. Aquaculture is collaborated with agriculture resulting in rich yield. Both aquaculture and agriculture go hand in hand. From the surveys, we still find a large number of diesel engines still being used for pumping water in India and Grid electricity generation in India leaded our country to be the third polluted country in the world, due to the harmful methods of electricity generation. Introducing a system which is pre-programmed for different crops so the farmers has to select the crop from mobile devices so the device calculates the real time parameters like timing using real time clock chip (RTC), humidity levels by the wireless sensors and weather from GSM module. The energy from the solar panels is eco-friendly and low cost, eliminating grid electricity which is majorly available at the off-peak times. Raspberry Pi is a SBC which means single board computer which can be used as wireless portable computer uses very less voltage say 5V. Its processing speed is 1.2GHz which is enough to do basic computation of programs to run various sensor nodes and data gathered is processed and this helps the device to work as real time systems. Timing of when the crops need water is decided by the sensor.

I. RELATED WORKS

Arvind Dattatreye Shaligram et al., **[1]**

proposed "**Smart Electronic System for Pond andmanagement in Fresh Water Aquaculture**",suggested that Freshwater aquaculture, and notagriculture, provides the bulk of world's farmed species to people in developing countries. The comparatively low cost of producing several highly productive species along with ready access to an abundance of water, makes freshwater aquaculture accessible to local people and communities. The fish farming has remained highly traditional in India when one considers fresh water ponds for fish/prawn's cultivation. In India as such there is no automation and control developed for these farms to have competitive yield and quality. In developing the system the following points were taken into consideration i) Operability ii) Portability iii) Adoptability to different pond sizes and iv) User Friendliness. The complete application software was developed using virtual instrument concepts. The whole system was realized around rugged industrial PC along with dedicated hardware designed and developed for this purpose. The whole System Consists of A) Programmable Pond water Sampling system B) Sensing Chamber C) Cleaning System

D) Parameter acquisition hardware E) Application Software F) Operator's Interface. The system is fitted on movable trolley so that it can be easily moved from one pond to another.

Kamuju Sai Divya et al.**, [2]** proposed **"Smart Aqua culture monitoring system using Raspberry Pi AWS IOT" Kamuju Sai Divya** proposed asystem **Smart Aqua culture monitoring systemusing Raspberry Pi AWS IOT,** in which monitoringof fishes using unique sensors and remedies for well-known problems. By water exchange, planting shady trees or making artificial shades during summer's thermal stratification can be prevented. Mechanical aeration can prevent formation of ice build-up in large areas of the pond. The principal source of oxygen in water is atmospheric air and photosynthetic planktons. Obtaining sufficient oxygen is a greater problem for aquatic organisms than terrestrial ones, due to low solubility of oxygen in water and solubility decreases with factors like-increase in temperature; increase in salinity; low atmospheric pressure, high humidity, high concentration of submerged plants, plankton blooms. Oxygen depletion in water leads to poor feeding of fish, starvation, reduced growth and more fish mortality, either directly or indirectly. Finally, the research suggests some unique points. Clear water indicates very low or absence of biological production-not fertile enough and fish will not grow well in it. Muddy water (that is a lot of clay particles are present), fish can have their gills blocked by the soil particles and this can result in death - not good for fish culture. Deep green water indicates over-production of planktons that serve as food for fish but occur as a result of application of more than enough fertilizers, manure or nutrient rich feeds to a pond. When a fish pond gives an offensive odor, it indicates pollution of pond water. Sources of pollution include water-quality parameters in which monitoring of fishes using unique sensors and remedies for well-known problems.

Shweta B. Saraf et al., **[3]** proposed "**IOT Based Smart Irrigation Monitoring and Controlling System"** aims to improve quality andquantity of the yield by sensing values like temperature, humidity, soil moisture and water level of the tank from the field without any manpower. The IOT concept is utilized more efficiently. Wireless sensor unit nodes installed in field for receiving real time parameters, a master node to receive and transmit data to ATmega328 which controls watering subsystem. Relay switching unit is the motor controlled which is actually controlled by ATmega328. ZIGBEE is programmed to transmit sensed data to the controller. As per crop selection Threshold values are used to compare the present data received and compared accordingly the motor is switched. End user gets the information through Android phones.

S. Abinayaet al., **[4]**Proposed on the topic "**INTELLIGENT IRRIGATION SYSTEM–AN IOT BASED APPROACH"** has its main objectiveto minimize work for Farming by using new technologies for higher yield of the crops and their water supply. The paper focus on automated controls with latest electronic technology using micro controller pumping water from the resource when earth's dampness content is below than required and GSM phone line. The device is efficient and compatible to changing environment. The upgrading versions are said to contain water monitoring system for, a water meter installed to estimate the amount of water used for irrigation and thus giving a cost estimation. The volume of flow of water is controlled by the valves and moreover, different types of Wireless sensors can also be used. Watering systems will supply water to the crops in more easy way.

ISBN : 978-93-87793-86-6

II. OBJECTIVES

- The primary objective of this system is to increase the yield in both aquaculture and agriculture.
- Introducing of RAS method of aquaculture to prevent wastage of water and ensure the production is healthy for the society.
- Maximise product efficiency by closely monitoring and altering the environmental conditions.
- Decreasing the usage of manmade chemical fertilizers to grow crops.
- High nutrients circulated throughout the field by waste water from fish pond.
- Reducing air pollution from diesel engines by the use of solar power.
- Affording occupation for farmers with low investments.

III. PROPOSED SYSTEM

- The Block diagram shows the pictorial representation of our proposed system. The solar panels gather the energy from the sun and stores it in battery and the voltage is regulated to the parts of circuit Sensors are DHTL1 temperature and humidity sensor, SEN0161 pH sensor, ESP8266 Wi-Fi module.
- Raspberry Pi collects, analyze and manipulates the environmental conditions according to the required values below the threshold values.
- Aeration unit consists of aquaponic air pumps to control the levels of oxygen in the water.
- pH regulation unit maintains the pH levels between 7 and 8 which is considerable for aquatic species and even for the soil.
- Fish feeding unit dispenses the food to the fishes based on timing requirements.
- Bio filtration is the process of filtering waste from the water from fish pond by capturing harmful chemicals and macrobiotic oxidation of contaminants in air.
- Old traditional ways of farming can come to an end with the aid of this system.

Limitations or drawbacks of existing systems in these fields can be overcome.

- The stored DC voltage is also converted to AC voltage using inverters to run the submersible pumps. Decision making and controlling is done by Raspberry Pi based on the data gathered by Wireless Sensor Nodes.
- Water level is also monitored using water level indicator. All the gathered data is transferred to the cloud and also sent to mobile device.

ISBN : 978-93-87793-86-6

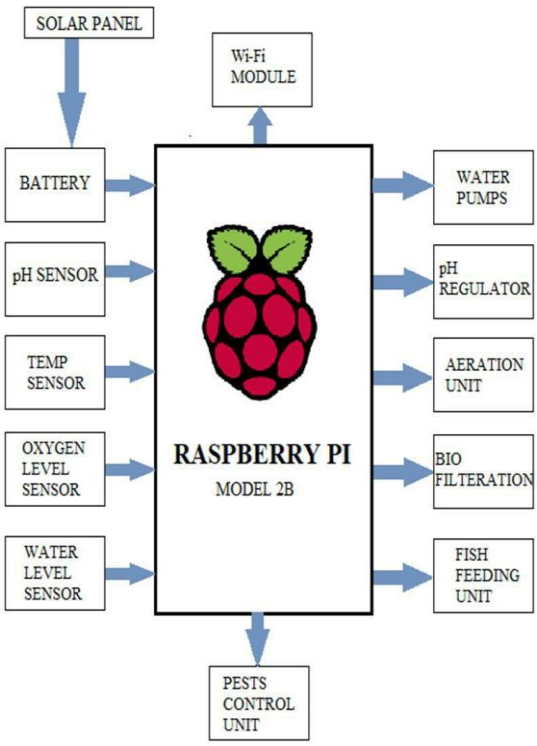

Fig.1.Block diagram of sustainable aquaculture and smart agriculture using IOT.

IV. SYSTEM DESIGN

Description of RASPBERRY PI launchpad

Raspberry Pi is low power portable device works under the technology of SBC (single board computers). It requires very less power to function say 5V 2Amp as the input. It includes the 40 GPIO pins where the sensors are connected to the Pi and the functioning of the sensors and their parameters are computed by Python programming language, further all the reading are recorded and saved in the cloud. The farmers who are still following same old traditional ways for irrigation can be changed by educating them with the present technology. The Raspberry Pi is the main hub where all the sensors are connected and the mobility of the whole system is easy compared to the diesel pumps since it runs on battery.

MOISTURE AND TEMPERATURE SENSOR

DHT11 Temperature and Humidity sensor is powerful and easy to use. This DHT11 temperature and humidity sensor has a full range temperature compensation, low power consumption, stability and calibrated digital signal. A high-performance 8-bit microcontroller is integrated in the sensor with calibration-coefficient saved in OTP memory to provide accurate temperature readings.

ISBN : 978-93-87793-86-6

HUMIDITY SENSOR

The HDC1010 is developed by TEXAS instruments. It a digital humidity sensor with integrated temperature sensor that provides accurate reading of the humidity and it also is digital and the precise readings are obtained. The HDC1010 is a low cost, low power operating sensor. It has wide range of applications in the field of agriculture.

V. CONCLUSION

Smart irrigation is made cost efficient, water wastage is controlled and unstable power supply is over come in this project. The era of IOT simplifies the farming methods which had huge drawbacks. The effective use of renewable source of energy (solar) helps in eco-friendly method of farming by not letting harmful gases like CH3, CFC etc. The use of RAS method of aquaculture associated to agriculture results in good yield for the farmers. Wireless sensors like humidity and temperature sensor, pH sensor are placed in different parts of the fields to monitor the parameters. The recorded parameters are send to the raspberry pi which is further sent it to the cloud using Wi-Fi module. This ensures sustainable aquaculture or fish farming to be very useful in the field of smart agriculture and production of crops is increased.

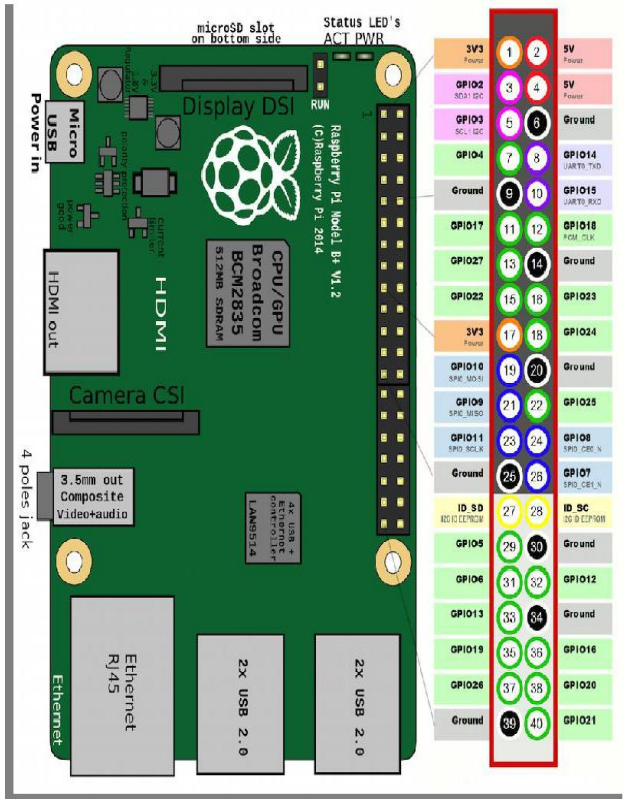

Fig.2.Raspberry Pi

VI. REFERENCES

[1] Satya Nagabhushana Rao Kamisetti,Srinivasa Inst. Of Engg. &Technology,Amalapuram, India,Arvind Dattatreye Shaligram,University ofPune,Pune, Shashikant Suresh Sadistap CentralElectronics Eng. Research Inst.Pilani, "Smart Electronic System for Pond Management in Fresh Water Aquaculture" 2012 IEEE Symposium on Industrial Electronics and Applications (ISIEA2012), September 23-26, 2012, Bandung, Indonesia.

[2] Kamuju Sai Divya**,** Asst Prof V Sandhya, BVC Engineering College,Odalarevu,AP,India,Asst Prof Roja Manchala Ellenki Educational Society iPROTECHS-Hyderabad.,"SmartAquaculture monitoring system using Raspberry Pi AWS IOT" International Journal of Science, Engineering and Technology Research (IJSETR) Volume 6, Issue 8, August 2017.

[3] Shweta B. Saraf , Dhanashri H. Gawali NBN Sinhgad School of Engineering. "IoT Based Smart Irrigation Monitoring And Controlling System". 2017 2nd IEEE International Conference On Recent Trends in Electronics Information & Communication Technology (RTEICT), May 19-20, 2017, India.

[4] Dr.M.Newlinrajkumar .S.Abinaya .Dr.V.Venkatesa Kumar.Computer Science and gineering ,Anna University, regional campus, coimbatore ,tamil nadu."INTELLIGENT IRRIGATION SYSTEM- AN IOT BASED APPROACH". IEEE International Conference on Innovations in Green Energy and Healthcare Technologies(ICIGEHT'17).