International Conference on Recent Developments in Science, Engineering, Management
YWCA of Delhi, Ashoka Road, Connaught Place, New Delhi (SEM-18)
05th August 2018 www.conferenceworld.in ISBN : 978-93-87793-39-2

DESIGN OF PORTABLE TRACKING SYSTEM FOR SOLAR POWER GENERATION

C.R.Balamurugan[1], M.Raoufkhan[2], P.Santhosh[3], N.Kayalvizhi[4], R.Kalaisurya[5]

[1]*Professor, Department of EEE, Karpagam College of Engineering, Coimbatore, Tamilnadu*
[2,3,4,5]*U.G students, Department of EEE, Karpagam College of Engineering, Coimbatore, Tamilnadu*

ABSTRACT

In this paper mainly we are going to focus on utilization of renewable energy .Conventional energy resources are not only limited but also the prime factor for environmental pollution. The aim of this paper is to generate electricity from solar energy. The sun direction will be continuously monitored, which will directly focus at 90° towards the solar panels. It will increase 40% more efficient in energy production than traditional solar. In this project when the sun rises in the morning solar system automatically unfolds and tracks the sun. It is weatherproof and continuously monitors wind speeds, automatically folding itself into secure position to prevent system damages and portable.

Keywords : solar panel, photo resistor, stepper motor, Arduino atmega328.

I. INTRODUCTION

While thinking about the development of a nation, the prime factor comes to mind is 'energy'. Huge amount of nonrenewable energy is extracted, distributed, converted and consumed in the global society daily. Almost 85% of energy production depends on fossil fuels. The resources of the fossil fuels are limited and their usage results in global warming because it can be a threat for human being by the emission of greenhouse gases. If we want to provide a sustainable power production and safe world to the future generation, we have to utilize the growing demand for energy from renewable sources like solar energy. Renewable energy sources are considered to be the best sources of energy which means no harm to global environment. Solar energy is a renewable resource which is clean, economical, and less polluted compared to other resources and energy [1]. Photovoltaic module is one of the efficient sources by which solar energy is converted in the form of electricity.

Different semiconductor materials are used to make a solar panel. If Si is used to make solar panel, it becomes approximately 24.5% efficient [2].Solar panel engrosses the energy from the sun and the energy can be stored in the battery which can be used for different purposes. Solar tracker is a system by which a solar panel can actually follow the sun to increase the power [3]. The main objective of this system is to develop a standard

model of solar tracking system. Thus it can increase the efficiency of solar panel at a great extent compared with the conventional systems. The paper is organized as follows: Section II describes the photovoltaic technology and methods to improve efficiency of solar panel. Section III prototype of automatic solar tracker. The hardware implementation is described in section IV. The experimental result and discussion is described in section V. Finally, section VI concludes the paper.

II. PHOTOVOLTAIC TECHNOLOGY AND IMPROVING EFFICIENCY OF SOLAR PANEL

Photovoltaic solar panels absorb sunlight as source of energy to generate electricity. Depending on construction, photovoltaic modules can produce electricity from a range of frequencies of light, but usually cannot cover the entire solar range. Most of the solar modules are currently produced from crystalline silicon(c-Si) solar cells made of multi crystalline silicon.

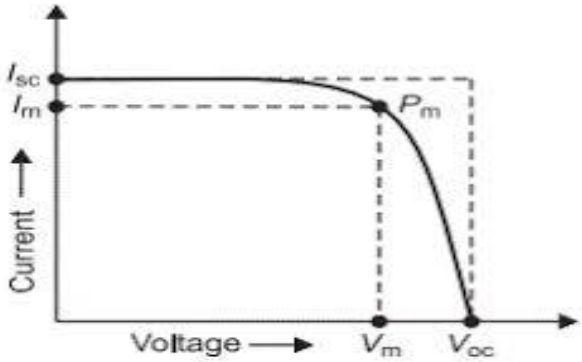

Fig. 1. I-V and P-V characteristics of solar cell

In 2013, crystalline silicon accounted for more than 90% of worldwide PV production, while the rest of the overall market is made up of thin-film technologies using cadmium telluride, CIGS and amorphous silicon. Emerging, third generation solar technologies use advanced thin-film cells. They produce a relatively high-efficiency conversion for the low cost compared to other solar technologies. Also, high-efficiency and close-packed rectangular multi-junction(MJ) cells are preferably used in solar panels and another emerging PV technology using MJ-cells is concentrator phoyovoltaics(PV).

Solar panel conversion efficiency, typically in the 20% range, is reduced by dust, grime, pollen, and other particulates that accumulate on the solar panel. "A dirty solar panel can reduce its power capabilities by up to 30% in high dust/pollen or desert areas". Paying to have solar panels cleaned is often not a good investment; researchers found panels that had not been cleaned, or rained on, for 145 days during a summer drought in California, lost only 7.4% of their efficiency. Overall, for a typical residential solar system of 5 kW, washing panels halfway through the summer would translate into a mere 20% gain in electricity production until the

summer drought end in about 2 ½ months. For larger commercial rooftop systems, the financial losses are bigger but still rarely enough to warrant the cost of washing the panels. On average, panels lost a little less than 0.05% of their overall efficiency per day.

III. CONSTRUCTION OF AUTOMATIC SOLAR TRACKER

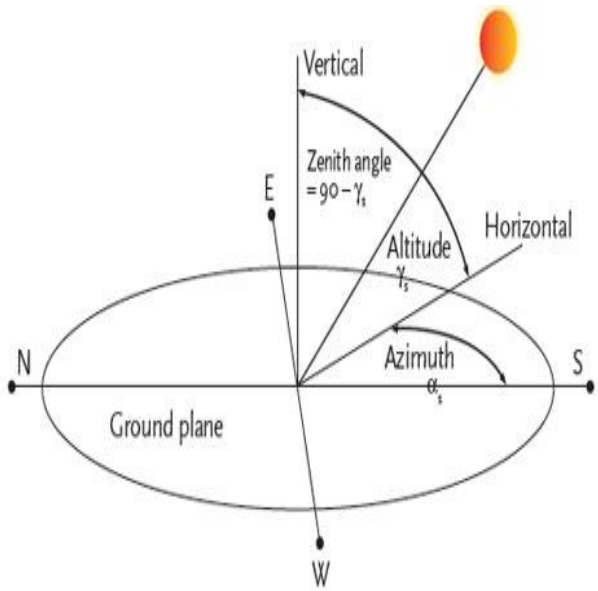

Fig. 2. Geometric model of solar position

- Photo resistor
- Microcontroller
- Stepper motor

Photo resistor

A photoresistor or LDR is light controlled variable resistor. A photoresistor is made of a high resistance semiconductor In the dark, photoresistor can have a resistance as high as several megaohms(MΩ),while in light, photoresistor can have a resistance as low as few ohms.Cadmium sulphide (CdS) photo resistor is inexpensive as a detector for a light beam Fg.3.

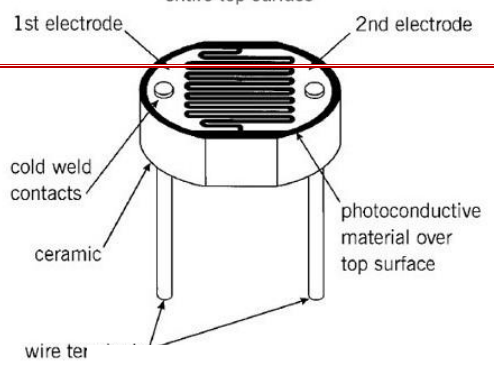

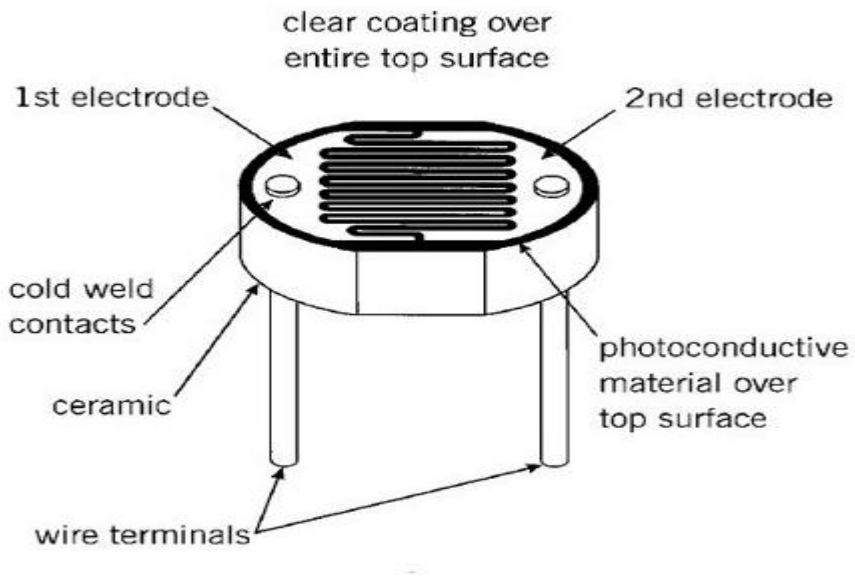

Fig. 3. Photo resistor light sensor

The CdS photo resistor is a passive element that has a resistance inversely proportional to the amount of light incident on it. To utilize the photo resistor, it is placed in series with another resistor. A cadmium-sulphide (CdS) photo resistor (or photo cell is a device that changes resistance depending on light intensity. It's sensitive, fast and has been around for decades. It's often used in street lights. We can see the variation of efficiency of LDR with solar radiation,according to the darknight time,average sunny day and bright sunlight in Fig 4.

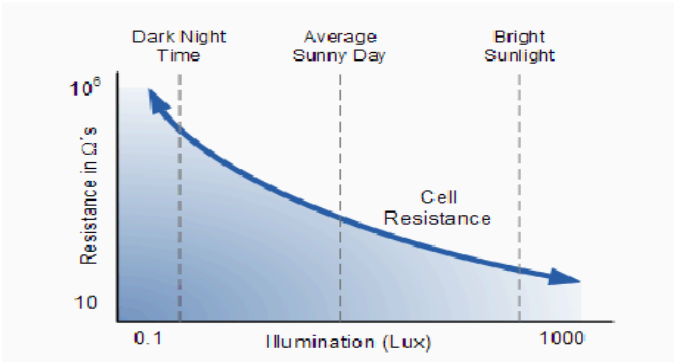

Fig. 4. Variation of efficiency of LDR with solar radiation (1)t

In above figure shows that variation of LDR based upon the sun light solar tracking is 40% efficieny then the fixed solar panels.

A. Stepper motor

Stepper motors are used to precision positioning control applications. It has five main characteristics of the stepper motor have been considered while choosing stepper motor for the solar tracker system and Fig 5 shows that rotation and position of the motor can rotate.

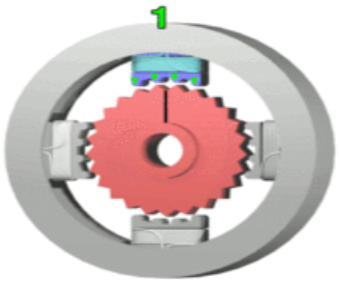

Fig. 5. Stepper motor rotations.

Stepper motor is brushless, open loop positioning capability, good holding torque, load independent and excellent response characteristics. The brushless DC electric motor that divides a full rotation into number of equal steps. The stepper motor is an electromagnetic device that converts digital pulses into mechanical shaft rotation. It has several advantages few of them are low cost, high reliability, high torque at low speeds and simple, rugged construction that operates in almost any environment and the main disadvantages in using stepper motor is the resonance effect often exhibited at low speeds and decreasing torque with increasing speed. Although efficiency is greatly affected by the motor's construction, the Wye winding is normally more efficient. A Wye-connected winding does not contain a closed loop in which parasitic currents can flow, preventing such losses. Fig.6 shows that difference between the DC motor and Stepper motor. The DC motor runs at the high speed with low torque and the stepper motor runs at low speed with high torque.

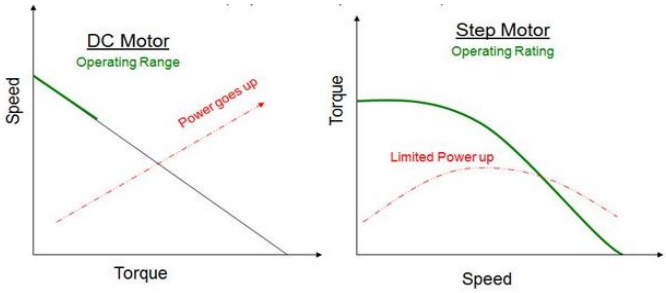

Fig. 6. Variation of speed-torque in DC motor and stepper motor.

B. Microcontroller

The ATMEGA328 is a single-chip microcontroller created by Atmel in mega AVR family and Harvard architecture 8-bit RISC processor core. Microcontroller is the heart of overall system. ATMEGA328 microcontroller requires a 5volt regulated voltage supply.

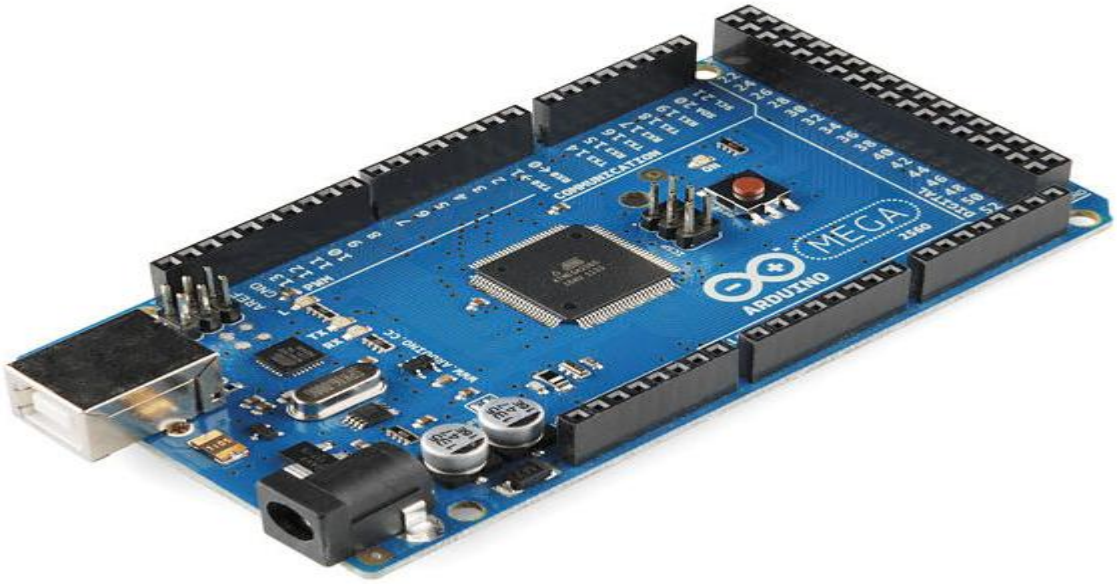

Fig. 7. Microcontroller arduino ATmega328

1) Timers:

Built-in timer of ATMEGA328 is utilized to create delay. The Earth rotates on its own axis, with respect to the sun 360˚ in a day and so it rotates, (360˚/24=) 15˚ an hour or 3.75˚ in 15 minutes. Delay for 1.5 minutes and 15 minutes are required. These delays are mentioned as short delay and moderate delay respectively.

2) Algorithm:

In the proposed algorithm two variables I and Count have been used. I represents total number of rotation the motor must make to track the sun from dawn to dusk. First hour after the sunrise and last hour before the sunset is not considered for the tracking; The last hour before sunset will provide additional energy to rotate the panel in the initial position and so the tracker no more rotates to the west rather it will rotate reversely. As 2 hours in day time are not considered for tracking, (2X15˚=) 30˚ of rotation is not required to be done by the solar tracker. Half stepping of stepper motor is considered which gives 3.75˚ rotation in each stepping; approximately ((180˚-30˚)/3.75˚=) 40 rotations are required in each day to track the sun at daylight. Count is used for counting the number of 'wait' states when weather is cloudy and does not permit to rotate the motor.

IV. OPERATION OF THE SOLAR TRACKER

In Solar tracker provides three ways of operation and control mechanism through the programe written in microcontroller. Operational flow chart of the solar tracker is given in Fig. 9.

A. Normal day light condition:

Four photo resistors are used in the solar tracker to compare the output voltages from all directions. As the solar tracker is ON photo resistor will locate the sun based upon the light intensity, AIN0 needs to provide higher voltage than AIN1 to sense the rotation of the sun. This condition is considered as normal day light condition and tracker.

B. Bad weather condition:

When the sky gets cloudy, there will be less striking of light on the photo resistors and so sufficient voltages might not be available at junction point. The difference of voltage at junction point will not be greater than the threshold value. The sun continuously rotating in the sun direction. To solve this problem, a short delay is provided which will check for voltage input from junction point in every 1 minute. Microcontroller will use the variable Count to check for consecutively 15 times to make the 'wait' state equal to 25 minutes to rotate the stepper motor one step.

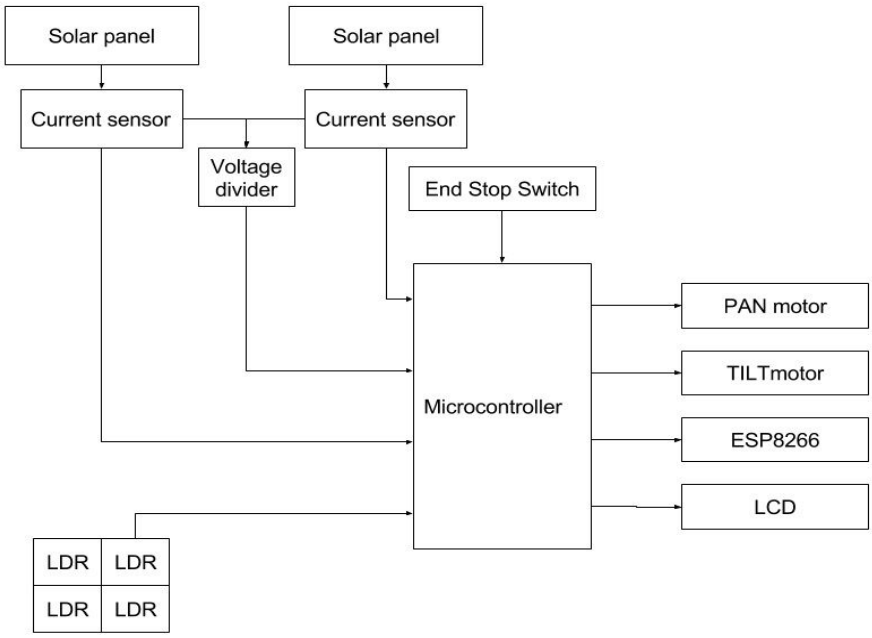

Fig. 8. Operational flow chart of the solar tracker

C. Bidirectional rotation

At day time, the solar tracker will rotate in only one direction from east to west mostly. Variable I will count the total rotation in day time and that is approximately calculated as 50 rotations considering 250˚ rotation. When the sun sets, no more rotation is needed in western direction. The next day, the solar panel needs to go to the initial

position in the morning to track the sun's position again. To do so, the variable I that counts the number of rotation in the day time will work out. When the variable (I) shows value greater than 50, the tracker stops rotating in the western direction and rotates reversely in the eastern direction to set the tracker to the initial position for the next day.

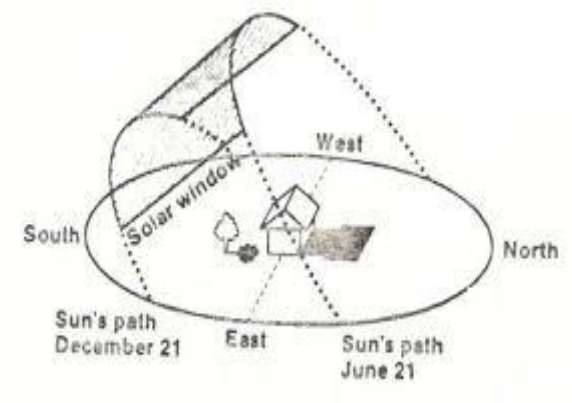

Fig. 9. Solar Tracker In Mechanism

V. FEATURES & FUTURE WORK OF THE SOLAR TRACKER

In future the portable solar tracker can be used as generators. We have just designed a small type prototype it can be implement in the huge manner based upon the amount. Solar Tracker has more advantage than fixed solar panels because it increases 40% more than the fixed solar panels. In future the solar will be prime factor for electricity as well as electric vehicle etc. Based upon the design we can gain more energy from the solar panels. The researchers are ongoing process to developing the efficient structure of solar tracker.

VI. CONCLUSIONS

The paper has presented a means of tracking the sun's position with the help of microcontroller and efficiently. Specially, it demonstrates a working software solution for maximizing solar cell output by positioning a solar panel at the point of maximum light intensity. The method for tracking the sun both in normal and bad weather condition. Moreover, the tracker can initialize the starting position itself which reduce the need of any more photo resistors. The attractive feature of the designed solar tracker is mechanism to control the system. The solar tracker also provides solution for third world countries to integrate it into their solar system with a comparatively low cost through solar tracking system.

REFERENCES

[1] Tung-Sheng Zhan, Whei-Min Lin and Ming-Huang Tsai Guo-Shiang Wang: Design and Implementation of the Dual-axis Solar Tracking System: *IEEE 37th Annual Computer Software and Application System*, 2013,pp.276-277.

[2] Md. Hanif Ali Sohag, Md. Mahmudul Hasan, Mst. Mahmuda Khatun and Modiuddin Ahmad: An Accurate and Efficient Solar Tracking System Using Image Processing and LDR Sensor: International Conference on Electrical Information and Communication Technology,2015, pp.522-527.

[3] Aayush Sharma, Varun Vaidya and Jamuna: Design of an Automatic Solar Tracking Controller:*International Conference on Power and Embedded Drive Control*, 2017, pp.505-510.

[4] Julakanti Satheesh Reddy, Abanishwar Chakraborti, Bikram Das: Implementation and Practical Evaluation of an Automatic Solar Tracking System for Different Weather Conditons: *Conference on Electrical, Electronics Engineering*, 2016.

[5] Prabodh Bajpai and Subhash kumar: Design,Development and Performance Test of an Automatic Two-Axis Solar Tracker System: *IEEE* ,2011.

[6] Pacis, M.C, Estoy, K.D., L.C., Martinez Jr and Linsangan: Design of a Solar Powered LED Lighting System using the Dual Axis Tracking System :*IEEE : An Internation Journal*, 2015.

[7] Falah I. Mustafa, Sarmid Shakir, Faiz F. Mustafa and Athmar thamer naiyf: Simple Design and Implementation of Solar Tracking System Two Axis with Four Sensors for Baghdad city: *The 9th International Renewable Energy Congress*,2018.

[8] Divya Mereddy, Vijaya Rama Raju V and Tharun Sadula : Smart Dual Axes Solr Tracking : *International Conference on Energy Systems and Application* , 2015, pp.370-374.

[9] William Christopher, Ramesh and Saravanan: Low Cost Automatic Solar Energy Trapping System: *IEEE*, 2011, pp.227-232.

[10] Md. Tanvir Arafat Khan, S.M Shahrear Tanzil, Rifat Rahman,S M Shafiul Alam: Design and Construction of an Automatic Solar Tracking System : 6th International Conference on Electrical and Computer Engineering, 2010, pp.326-329.