X International Conference on Multidisciplinary Research
(IEI, Chandigarh) Institution of Engineers, India , Chandigarh
22nd February 2020 www.conferenceworld.in
ISBN : 978-81-944855-2-0

DESIGN OF FULLY AUTOMATED UNIVERSAL LOAD LIFTING ATTACHMENT

Mohith Mathew[1], Dr. G Kumaresan[2]

[1]*Fourth Year BE Student, Department of Mechanical Engineering,*
Bannari Amman Institute of Technology, Sathyamangalam, Erode, India
[2]*Associate Professor, Department of Mechanical Engineering,*
Bannari Amman Institute of Technology, Sathyamangalam, Erode, India

ABSTRACT

Lifting attachments includes machines, attachments and accessories which lifts or lowers loads or people. The choice of attachment depends on the load and working conditions. The given innovation is capable of lifting solid loads. Plates or blocks of different dimensions, shapes and quantities can be loaded and unloaded. The attachment is capable of lifting blocks of multiple cross sections like circle, square, rectangle, polygonal. Load is lifted in two stages. Friction is used initially to lift the load a few centimeters off the ground. Then the locks are attached and the load is supported on the lock clamps. There is only a minimum chance for failure compared to the conventional lifting methods.

Industrial accidents are injuries are common where human intervention with machines is more. Manual load lifting causes spinal injuries and posture disorientations in workers. Often disorientations, unbalance or collapse of structures causes crushing and tumbling of loads. This often accounts for a large number of human life and serious injuries. By minimizing human interaction in load lifting, loss of human life can be completely avoided. Manual rigging of ropes and attachments demands workers to intervene in the process continuously. In our invention, the complete process of loading, transport and unloading can be fully automated. Thus the invention could also minimize industrial accidents.

Key Words – Load Lifting, Fully Automated, Universal Attachment, Multiple Plate Lifting

I. INTRODUCTION

Load lifting attachments are used in almost every field of engineering, manufacture and transport. Lifting attachment carries loads or people from one place to another. Lifting attachments are mainly divided into hoists, cranes, passenger lifts, forklifts, power shovels, telescopic handlers etc.[1]. There are also lifting accessories which helps the loads to be attached to the lifting machine. The type of attachment or accessories chosen are based on the type of loads and then working environment. The loads may be solid material like concrete, metal, pallets, wood or they may be in loose form like sand, or debris. All the lifting attachments available in the

ISBN : 978-81-944855-2-0

industry are only capable of lifting a particular dimension or material. Our innovative design is only capable of lifting solid loads. conventionally, the process of load lifting requires human interaction.

Today, a considerable amount of heavy loads are carried manually by workers. Most of the heavy loads are lifted by cranes. This manual lifting is more prevalent in construction and small scale industries [2]. Manual lifting possess a great threat to workers as they may develop skeletal and posture disorders. Majority of the lifting attachment used in our industries require manual rigging and continuous human interaction. This possesses a great threat to human life. Accidents and chances of failure like overturning are more when the loads are heavy or unstable [3]. Improper fixation or environmental interactions may cause collapse in cranes or machines which may crash or trap workers and employees. The most fatal injuries occur during handling and lifting of loads [4]. In this invention, we aim to bring a universal load lifting attachment capable of lifting loads of multiple shapes, dimensions and numbers. We also aim to make the load lifting process fully automated thus reducing human intervention and accidents.

II. OBJECTIVES

The prime objective of our innovation is to design a universal load lifting attachment capable of lifting different shapes and sizes.

In addition, the projects have the following scientific objectives.

(i) To lift plates of various shapes (circular, rectangular, polygonal, asymmetrical).
(ii) To accommodate different size range depending on the extension of the device.
(iii) To make the fully automated rigging process.
(iv) To reduce human intervention in load lifting and unloading process and hence to reduce industrial accidents.

III. METHODOLOGY

The given universal load lifting attachment consist of four telescopic arms(1) (Fig. 1) which can be controlled electrically, hydraulically or pneumatically. They can be adjusted along their axis based on the shape and size of the materials to be handled. Here the plates are of square cross section (2)(Fig. 2). The four arms are extended using electrical motor (3)(Fig. 3) connected to bevel gears (4)(Fig. 3) of individual arm. Both hydraulic and pneumatic actuators can be used when the material is asymmetric along axis. Friction pads (5)(Fig. 4) line the inside of the vertical arm extension. When tightened the friction pads holds the corresponding work plates from slipping. To prevent manual rigging of clamps and to lock the clamps, the plates must be lifted to around 20cm from the ground. An external belt (6)(Fig. 5) is tightened around the tightening arm to get this initial lift for locking. The belt is tightened by electric motor (8)(Fig. 5). A ratchet and pawl mechanism (7)(Fig. 5) prevent loosening of the belt during the lift. As the tightened load is lifted few inches above the base, the locking clamps (9)(Fig. 6) are engaged. Now the load rests on the four clamps and the load is totally safe to be moved around.

ISBN : 978-81-944855-2-0

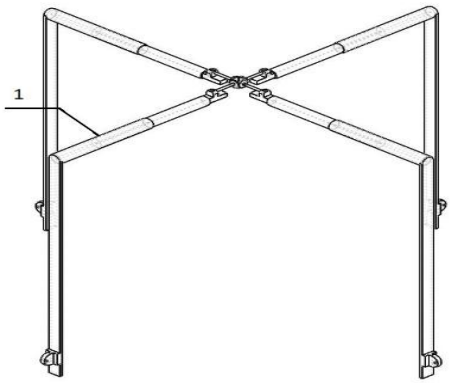

Figure 1

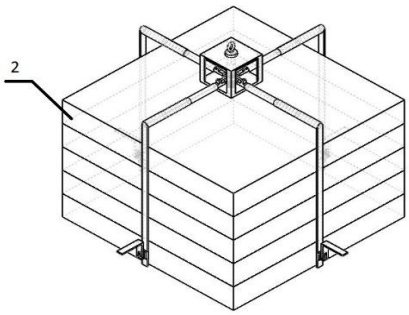

Figure 2

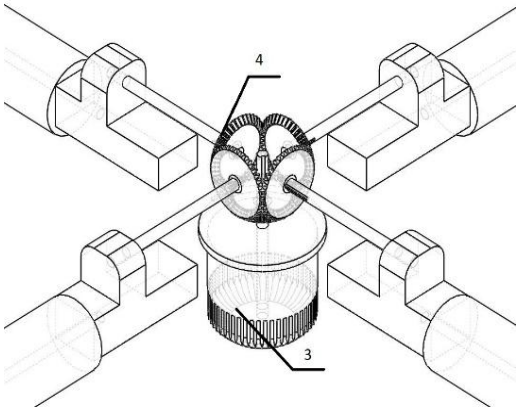

Figure 3

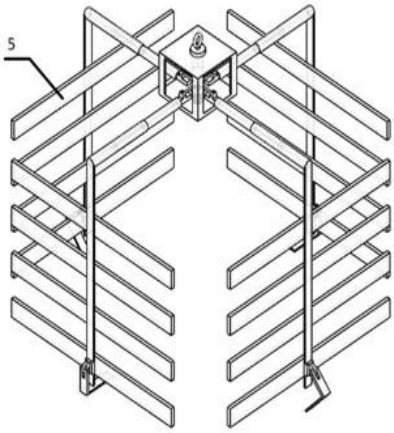

Figure 4

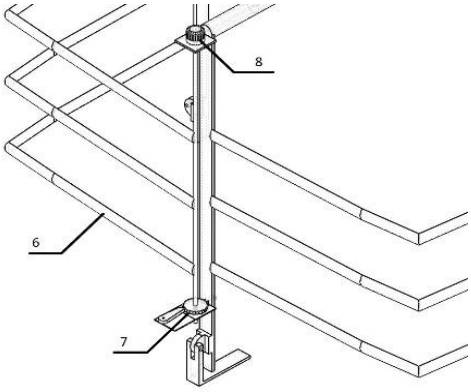

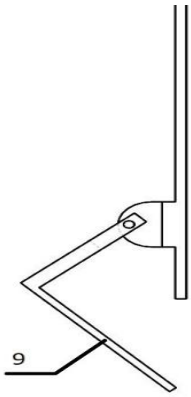

ISBN : 978-81-944855-2-0

Figure 5 Figure 6

IV. CONCLUSION

In summary, the given design addresses the concern for a universal load lifting attachment for industries. The given design is versatile and can be modified accordingly for the type of industry. Pneumatic, hydraulic and electrical actuators can be used for adjusting the arms. The friction material used for tightening the load can also be customized for the desired load and coefficient of friction. Another important aspect of the design is to make the process fully automated. The elimination of human intervention in rigging and lifting process may prevent loss of life and serious injuries in industries

REFERENCES

[1] Deroiste, Karla Van den Broek, MarjoleinDouwes, "Lifting operations and lifting equipment" OSH WIKI Internet: https://oshwiki.eu/wiki/Lifting_operations_and_lifting_equipment.

[2] Milazzo, Maria Francesca &Spasojević-Brkić, Vesna &Ancione, Giuseppa. (2015). SAFETY IN CRANE OPERATIONS: AN OVERVIEW ON CRANE-RELATED ACCIDENTS. 10.13140/RG.2.1.4738.5046. H. Simpson, *Dumb Robots*, 3rd ed., Springfield: UOS Press, 2004, pp.6-9.

[3] AyaulymRakhmatulina, SerikbayKosbolov, GaukharTanzharikova,
Design of a New Load Lifting Mechanism, Procedia - Social and Behavioral Sciences, Volume 83,2013.

[4] Huse, J. R. (2006, January 1). Lifting Operations Accidents: Root Causes and the Application of HAZOP Techniques in Controlling the Lifting Risks. Society of Petroleum Engineers. doi:10.2118/98456-MSB. Simpson, et al, "Title of paper goes here if known," unpublished.